MICRO SWITCH
FREEPORT ILLINOIS U.S.A.
A DIVISION OF HONEYWELL
FED. MFG. CODE 91929

SWITCH - ENCLOSED

CATALOG LISTING
22EN142-6

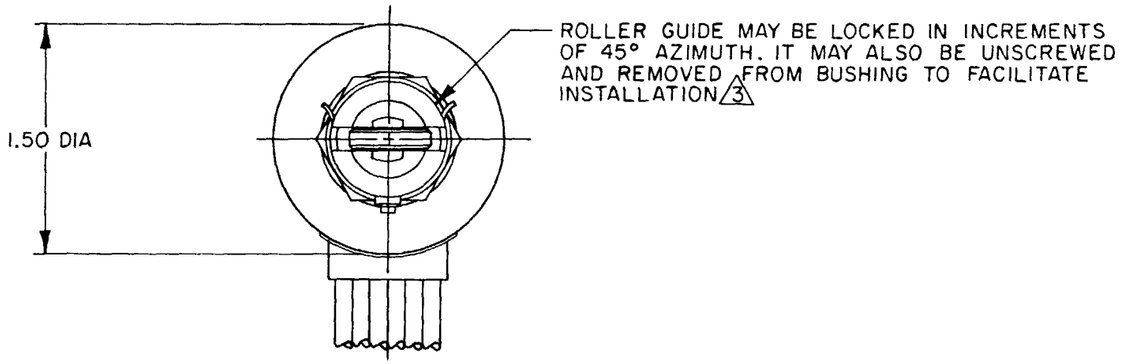

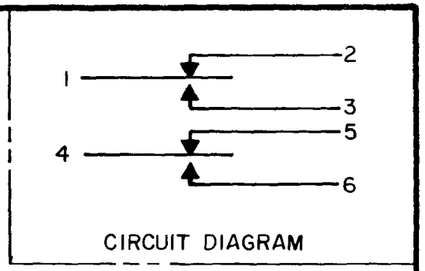

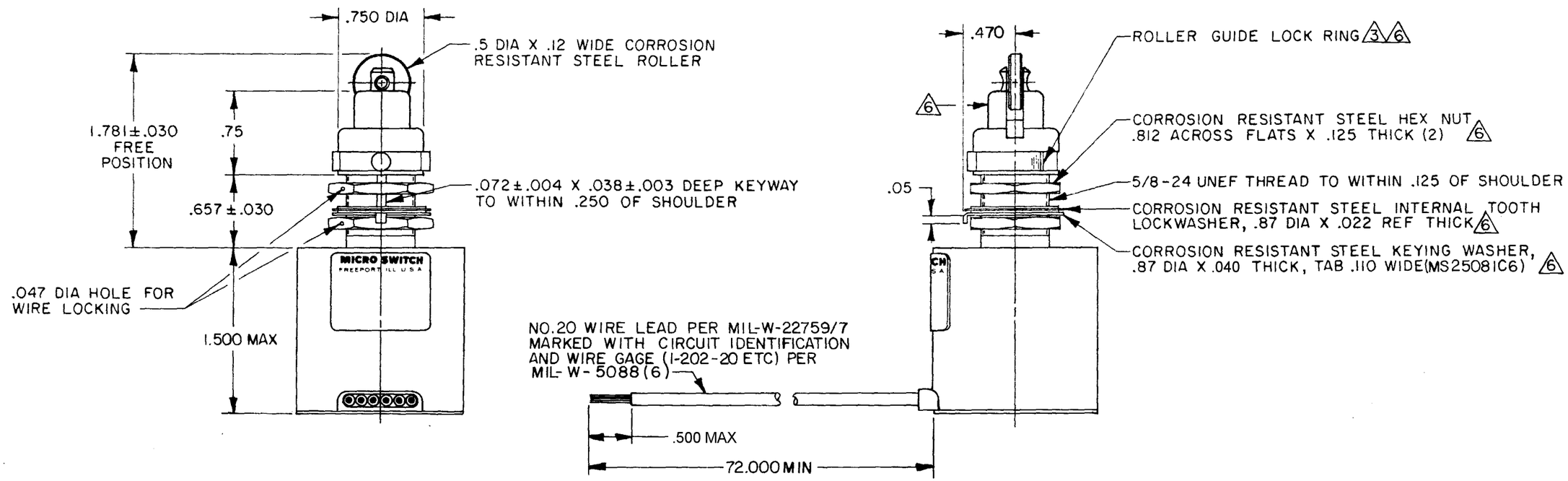

THIS DRAWING COVERS A PROPRIETARY ITEM AND IS THE PROPERTY OF MICRO SWITCH, A DIVISION OF HONEYWELL. THIS DRAWING IS NOT TO BE COPIED OR USED WITHOUT THE APPROVAL OF MICRO SWITCH.

THIRD ANGLE PROJECTION

SCALE FULL

DO NOT SCALE PRINT

TOLERANCES
APPLY TO DESIGN UNITS. CONVERSIONS ARE ONLY FOR REFERENCE. UNLESS NOTED, TOLERANCES ARE ±

	DIM. mm	TOL. mm/in	DIM. in	TOL. mm/in
NO PLACES	X	1/.04		
ONE PLACE	X.X	0.4/.016		
TWO PLACES	X.XX	0.15/.006	X.X	0.8/.03
THREE PLACES			X.XX	0.38/.015
ANGLES			X.XXX	0.13/.005

SI METRIC — US CUSTOMARY
DESIGN UNITS ☐ ☒

RAW MATERIAL-COMMERCIAL STANDARD
MICRO SWITCH STANDARDS APPLY
DIMENSIONS ARE TO BE MET BEFORE PROTECTIVE COATINGS ARE APPLIED

WEIGHT 13.5 OZ MAX

CHARACTERISTICS

OPERATING FORCE	6-12 LB
FULL OVERTRAVEL FORCE	30 LB MAX
RELEASE FORCE	5 LB MIN
PRETRAVEL	.050 MAX
DIFFERENTIAL TRAVEL	.035 MAX
OVERTRAVEL	.250 MIN

ELECTRICAL DATA

CONTACT ARRANGEMENT
SEE CIRCUIT DIAGRAM

LOAD	28 VDC	
	SEA LEVEL	50,000 FT.
RES	10	10
IND	3	3
MOTOR	6	
LAMP		

NOTES
1 - CORROSION RESISTANT STEEL ENCLOSURE
2 - SWITCH SEALED PER MIL-PRF-8805, SYMBOL 4
3 - TO ADJUST ROLLER DIRECTION, REMOVE ROLLER GUIDE LOCK RING SCREW ROLLER GUIDE DOWN AS FAR AS POSSIBLE, THEN UNSCREW TO DESIRED POSITION. SECURE BY REPLACING ROLLER GUIDE LOCK RING
4 - COINCIDENCE OF OPERATING AND RELEASING POINTS: .010 OF PLUNGER TRAVEL
5 - CIRCUIT DIAGRAM AND CATALOG LISTING ARE SHOWN ON NAMEPLATE
6 - HARDWARE MAY BE PACKAGED UNASSEMBLED PER MIL-PRF-8805
7 - ALL EXPOSED SURFACES ARE SKYDROL 500 COMPATIBLE

REPLACES X84743-EN
RELEASE NO. PR-14977
DRAWING NUMBER M 22EN142-6
ISSUE X2 X4
REVISIONS
A PR14977 JAS 3 SEPT 86
B C060910 TRF 8 OCT 87
C 0000307 JAH 15 MAY 03
DRAWN J A S 18 AUG 86
RASTER