Product Details for 5223007 -2

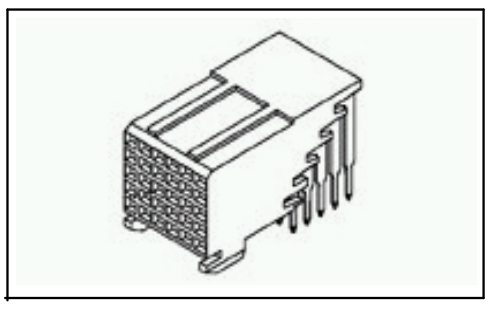

5223007 -2

Active

2mm Centerline Futurebus+ Connectors

RoHS Compliant (Statement of Compliance)

Product Highlights:

- Module Type = Signal
- 60 Signal Positions
- Free-Board (Receptacle)
- PCB Mount Angle = Right Angle
- Number of Rows = 5

View all Features

Quick Links

Check Pricing & Availability
Search for Tooling
View Mating Products (23)
Product Feature Selector
Contact Us About This Product

Documentation & Additional Information

Product Drawings:

- ASSEMBLY, RECEPTACLE, SIGNAL, RIGHT ANGLE, Z -PACK 2m... (PDF, English)

Catalog Pages/Data Sheets:

- None Available

Product Specifications:

- Connector, Z -PACK*, 2 mm FB, Signal and Power (PDF, English)

Application Specifications:

- Z-PACK 2mm FB (Futurebus+) Receptacle and Pin Header... (PDF, English)

Instruction Sheets:

- None Available

CAD Files:

- None Available

List all Documents

Additional Information:

- Product Line Information

Related Products:

- Tooling
- Mating Products (23)

Product Features (Please use the Product Drawing for all design activity)

Product Type Features:

- Product Type = Free -Board (Receptacle)
- PCB Mount Angle = Right Angle
- Post Type = Solder Post

Mechanical Attachment:

- Module Type = Signal

Electrical Characteristics:

- Voltage Rating (VAC) = 30

Termination Related Features:

- Termination Post Length (mm [in]) = 3.53 [0.139]

Body Related Features:

- Number of Signal Positions = 60
- Sequencing = No
- Number of Rows = 5
- Post Plating = Tin
- Centerline, Matrix (mm [in]) = 2.00 x 2.00 [.079 x .079]

Contact Related Features:

- Contact Material = Phosphor Bronze
- Contact Mating Area Plating = Gold (30)

Housing Related Features:

- Housing Material = Liquid Crystal Polymer (LCP)

Industry Standards:

- RoHS/ELV Compliance = RoHS compliant, ELV compliant
- Lead Free Solder Processes = Wave solder capable to 240°C, Wave solder capable to 260°C, Wave solder capable to 265°C, Reflow solder capable to 245°C, Reflow solder capable to 260°C, Pin -in-Paste capable to 245°C, Pin -in-Paste capable to 260°C
- RoHS/ELV Compliance History = Always was RoHS compliant

Other:

- Brand = AMP

© 2006 Tyco Electronics Corporation All Rights Reserved