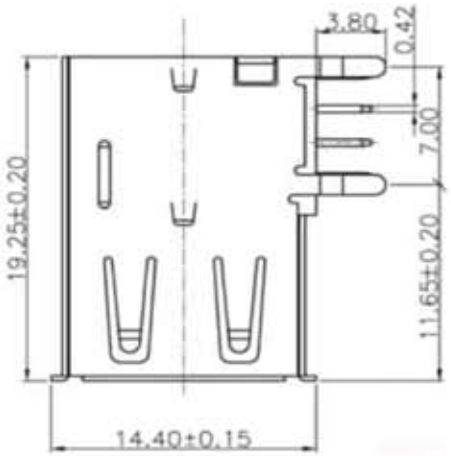

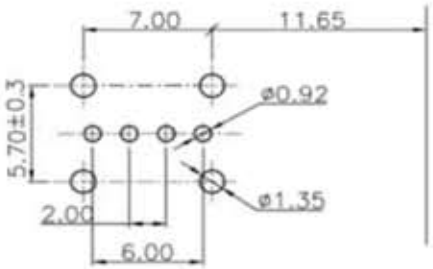

RECOMMENDED PCB LAYOUT

Materials:

- Housing: PBT +30% G.F. UL 94V-O
- Color: White
- Contact: Phosphor Bronze
- Front Shell: Brass
- Back Shell: Steel
- Contact Plating: Gold 30µ"
- Shell Plating: Nickel

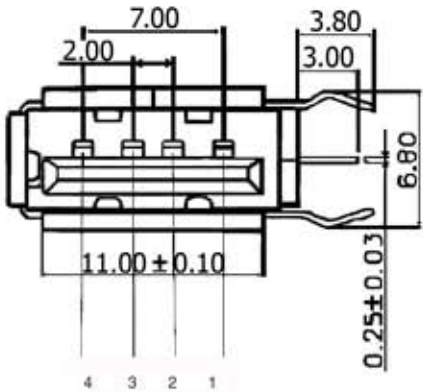

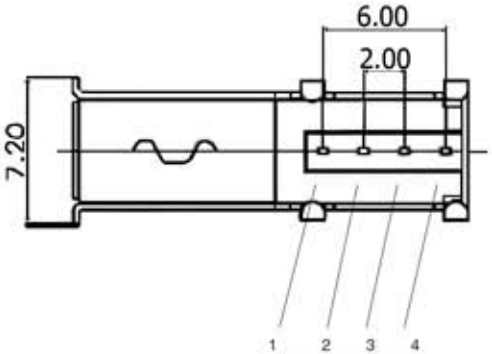

Electrical:

- Voltage Rating: 30V
- Current Rating: 1.5A
- Contact Resistance Terminal: 30mΩ Max.
- Dielectric withstanding voltage: 500V AC
- Insulation resistance: 1,000MΩ Min.
- Temperature Range: -55°C ~ +85°C

Measurements are in mm

RoHS Complaint

Scale	1:1	0	Added Pin Layouts	2/24/12	Miller			Name	Item No. A-USB/2-A-E-R
TOLERANCE						Drawn	10.19.11	Chappell	
X.X	±0.40					Approved	2/24/12	Warner	Title: USB 2.0, A version, Horizontal DIP Type
X.XX	±0.25								
X.XXX	±0.15								Drawing No. rev 01
Angle	±3°								
			Modification	Date	Name				Replace / Sheet

ASSMANN WSW components