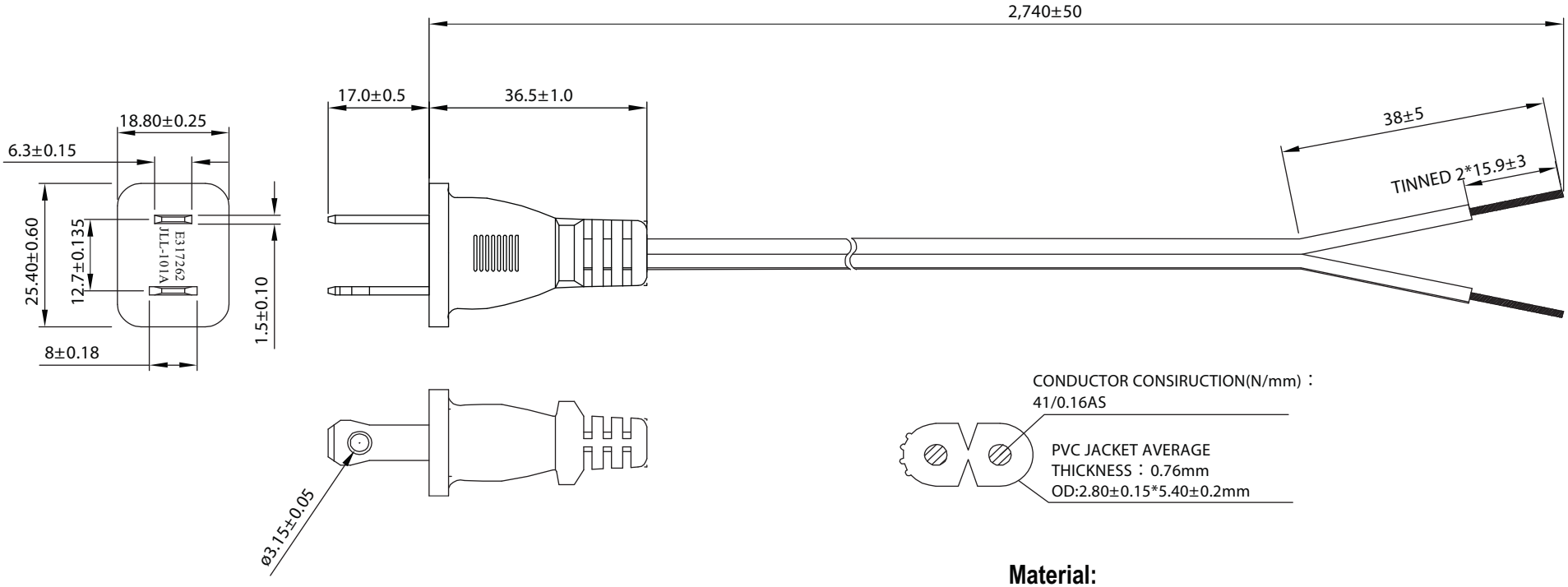

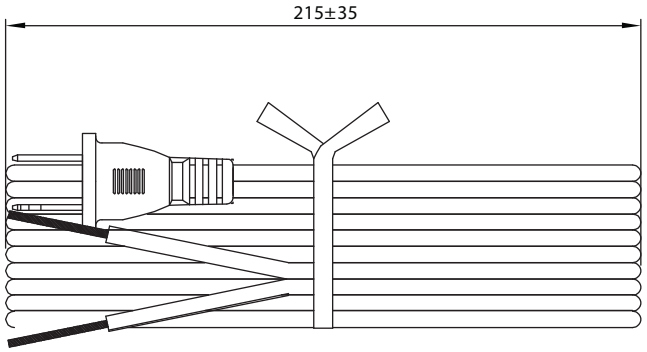

Material:

- E243711(UL) SPT-1 2 x 18AWG(0.824MM²)
  VW-1 60°C 300V
  - CSA 228191
- Jacket Color: Black

Electrical:

- 100% Open & Short Testing
- Insulation Resistance: 100MΩ (Min.)
- Voltage: 500V DC / 1 Min.

Unit: MM

RoHS Complaint

Scale	1:1						Name
TOLERANCE							
X.X	±0.40			Drawn	11.27.11		Chappell
X.XX	±0.25			Approved			
X.XXX	±0.15						
Angle	±3°						
			Modification	Date	Name		

ASSMANN WSW components

Item No. **AK500-OE-12-9F-R**

Title Power Cord - SPT-1/Open End, Polarized, Unshielded, 60°C, 9 Feet

Drawing No. **rev00**

Replace | Sheet