molex

# MX150 RECEPTACLE 2X3 SEALED ASSEMBLY MAT SEAL
## BOM AND PIN OUT SHEET

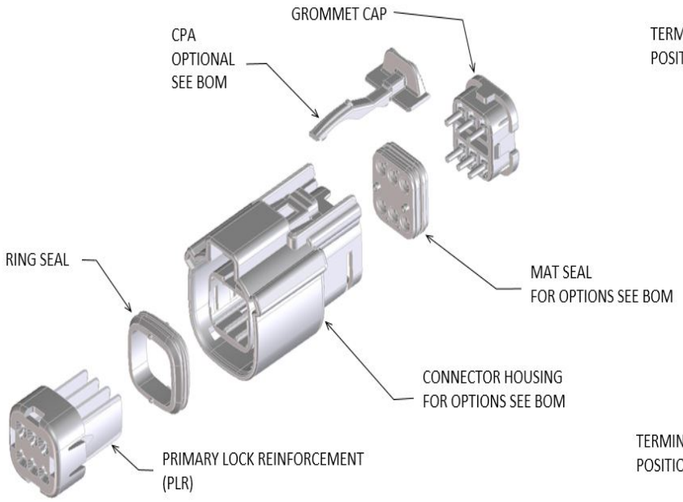


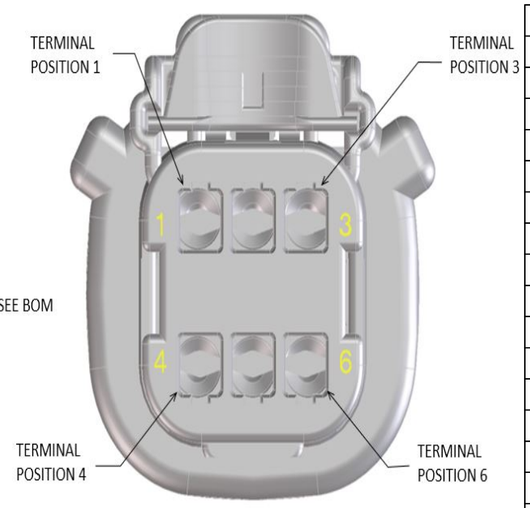


| ABBREVIATION | DESCRIPTION | COLOR | MATERIAL |
|---|---|---|---|
| A-BLACK | HOUSING, KEYING OPTION A | BLACK | SPS/NYLON GF20 |
| B-LIGHT GRAY | HOUSING, KEYING OPTION B | LIGHT GRAY | SPS/NYLON GF20 |
| C-BROWN | HOUSING, KEYING OPTION C | BROWN | SPS/NYLON GF20 |
| D-GREEN | HOUSING, KEYING OPTION D | GREEN | SPS/NYLON GF20 |
| C-DARK GRAY | HOUSING, KEYING OPTION C | DARK GRAY | SPS/NYLON GF20 |
| D-STONE GRAY | HOUSING, KEYING OPTION D | STONE GRAY | SPS/NYLON GF20 |
| A-YELLOW | HOUSING, KEYING OPTION A | YELLOW | SPS/NYLON GF20 |
| A-BLACK-CLIP | HOUSING, KEYING OPTION A WITH CLIPSLOT | BLACK | SPS/NYLON GF20 |
| B-LIGHT GRAY-CLIP | HOUSING, KEYING OPTION B WITH CLIPSLOT | LIGHT GRAY | SPS/NYLON GF20 |
| C-BROWN-CLIP | HOUSING, KEYING OPTION C WITH CLIPSLOT | BROWN | SPS/NYLON GF20 |
| D-GREEN-CLIP | HOUSING, KEYING OPTION D WITH CLIPSLOT | GREEN | SPS/NYLON GF20 |
| C-DARK GRAY-CLIP | HOUSING, KEYING OPTION C WITH CLIPSLOT | DARK GRAY | SPS/NYLON GF20 |
| D-STONE GRAY-CLIP | HOUSING, KEYING OPTION D WITH CLIPSLOT | STONE GRAY | SPS/NYLON GF20 |
| A-YELLOW-CLIP | HOUSING, KEYING OPTION A WITH CLIPSLOT | YELLOW | SPS/NYLON GF20 |
| GCO | GROMMET CAP (OPEN) | BLACK | SPS/NYLON GF20 |
| GCP | GROMMET CAP (PLUGGED) | BLACK | SPS/NYLON GF20 |
| PLR | PLR | NATURAL | SPS/NYLON GF20 |
| CPA | CPA | RED | PBT GF30 |
| M | MAT SEAL | LIGHT BLUE | INHERENTLY LUBRICATED SILICONE |
| R | RING SEAL | RUST RED | INHERENTLY LUBRICATED SILICONE |

FOR ADDITIONAL INFORMATION SEE SD-33472-0001

| ASSEMBLY DESCRIPTION | ASSEMBLY PART NUMBER | COMPONENT | | | | | | BLOCKED TERMINALS | | | STATUS | COMMENT | OPTIONAL ATTACHMENTS SOLD SEPARATELY | |
|---|---|---|---|---|---|---|---|---|---|---|---|---|---|---|
| | | THE PRESENCE OF AN ABBREVIATION INDICATES THE PRESENCE OF THAT COMPONENT | | | | | | CAVITY WITH A NUMBER INDICATES BLOCKED TERMINAL POSITION<br>CAVITY WITHOUT A NUMBER INDICATES OPEN TERMINAL POSITION | | | | | | |
| | | HOUSING KEY/COLOR | GROMMET CAP | PLR | CPA | MAT SEAL | RING SEAL | | | | | | BACKSHELL WITH RIBS | BACKSHELL WITHOUT RIBS |
| MX150 ASSY RCP 2X3 BK A/6 | 334720601 | A-BLACK | GCO | PLR | | M | R | -<br>- | -<br>- | -<br>- | SALEABLE | | 34951-0610 | 34951-0620 |
| MX150 ASSY RCP 2X3 LG B/6 | 334720602 | B-LIGHT GRAY | GCO | PLR | | M | R | -<br>- | -<br>- | -<br>- | SALEABLE | | 34951-0610 | 34951-0620 |
| MX150 ASSY RCP 2X3 BR C/6 | 334720603 | C-BROWN | GCO | PLR | | M | R | -<br>- | -<br>- | -<br>- | NOT RECOMMENDED | SEE PN 334720668 | 34951-0610 | 34951-0620 |
| MX150 ASSY RCP 2X3 GR D/6 | 334720604 | D-GREEN | GCO | PLR | | M | R | -<br>- | -<br>- | -<br>- | NOT RECOMMENDED | SEE PN 334720669 | 34951-0610 | 34951-0620 |
| MX150 ASSY RCP 2X3 CPA BK A/6 | 334720606 | A-BLACK | GCO | PLR | CPA | M | R | -<br>- | -<br>- | -<br>- | SALEABLE | | 34951-0610 | 34951-0620 |
| MX150 ASSY RCP 2X3 CPA LG B/6 | 334720607 | B-LIGHT GRAY | GCO | PLR | CPA | M | R | -<br>- | -<br>- | -<br>- | SALEABLE | | 34951-0610 | 34951-0620 |
| MX150 ASSY RCP 2X3 CPA BR C/6 | 334720608 | C-BROWN | GCO | PLR | CPA | M | R | -<br>- | -<br>- | -<br>- | NOT RECOMMENDED | SEE PN 334720670 | 34951-0610 | 34951-0620 |
| MX150 ASSY RCP 2X3 CPA GR D/6 | 334720609 | D-GREEN | GCO | PLR | CPA | M | R | -<br>- | -<br>- | -<br>- | NOT RECOMMENDED | SEE PN 334720671 | 34951-0610 | 34951-0620 |
| MX150 ASSY RCP 2X3 BK A/5 | 334720611 | A-BLACK | GCP | PLR | | M | R | -<br>- | -<br>- | 3<br>- | SALEABLE | | 34951-0610 | 34951-0620 |
| MX150 ASSY RCP 2X3 LG B/5 | 334720612 | B-LIGHT GRAY | GCP | PLR | | M | R | -<br>- | -<br>- | 3<br>- | SALEABLE | | 34951-0610 | 34951-0620 |
| MX150 ASSY RCP 2X3 BR C/5 | 334720613 | C-BROWN | GCP | PLR | | M | R | -<br>- | -<br>- | 3<br>- | NOT RECOMMENDED | | 34951-0610 | 34951-0620 |
| MX150 ASSY RCP 2X3 GR D/5 | 334720614 | D-GREEN | GCP | PLR | | M | R | -<br>- | -<br>- | 3<br>- | NOT RECOMMENDED | | 34951-0610 | 34951-0620 |
| MX150 ASSY RCP 2X3 CPA BK A/5 | 334720616 | A-BLACK | GCP | PLR | CPA | M | R | -<br>- | -<br>- | 3<br>- | SALEABLE | | 34951-0610 | 34951-0620 |
| MX150 ASSY RCP 2X3 CPA LG B/5 | 334720617 | B-LIGHT GRAY | GCP | PLR | CPA | M | R | -<br>- | -<br>- | 3<br>- | SALEABLE | | 34951-0610 | 34951-0620 |
| MX150 ASSY RCP 2X3 CPA BR C/5 | 334720618 | C-BROWN | GCP | PLR | CPA | M | R | -<br>- | -<br>- | 3<br>- | NOT RECOMMENDED | | 34951-0610 | 34951-0620 |

molex

# MX150 RECEPTACLE 2X3 SEALED ASSEMBLY MAT SEAL
## BOM AND PIN OUT SHEET

| ASSEMBLY DESCRIPTION | ASSEMBLY PART NUMBER | COMPONENT<br>THE PRESENCE OF AN ABBREVIATION INDICATES THE PRESENCE OF THAT COMPONENT | | | | | | BLOCKED TERMINALS<br>CAVITY WITH A NUMBER INDICATES BLOCKED TERMINAL POSITION<br>CAVITY WITHOUT A NUMBER INDICATES OPEN TERMINAL POSITION | | | STATUS | COMMENT | OPTIONAL ATTACHMENTS SOLD SEPARATELY | |
|---|---|---|---|---|---|---|---|---|---|---|---|---|---|---|
| | | HOUSING KEY/COLOR | GROMMET CAP | PLR | CPA | MAT SEAL | RING SEAL | | | | | | BACKSHELL WITH RIBS | BACKSHELL WITHOUT RIBS |
| MX150 ASSY RCP 2X3 CPA GR D/5 | 334720619 | D-GREEN | GCP | PLR | CPA | M | R | - | - | 3 | NOT RECOMMENDED | | 34951-0610 | 34951-0620 |
| | | | | | | | | - | - | - | | | | |
| MX150 ASSY RCP 2X3 BK A/4 | 334720621 | A-BLACK | GCP | PLR | | M | R | - | - | 3 | SALEABLE | | 34951-0610 | 34951-0620 |
| | | | | | | | | 4 | - | - | | | | |
| MX150 ASSY RCP 2X3 LG B/4 | 334720622 | B-LIGHT GRAY | GCP | PLR | | M | R | - | - | 3 | SALEABLE | | 34951-0610 | 34951-0620 |
| | | | | | | | | 4 | - | - | | | | |
| MX150 ASSY RCP 2X3 BR C/4 | 334720623 | C-BROWN | GCP | PLR | | M | R | - | - | 3 | NOT RECOMMENDED | | 34951-0610 | 34951-0620 |
| | | | | | | | | 4 | - | - | | | | |
| MX150 ASSY RCP 2X3 GR D/4 | 334720624 | D-GREEN | GCP | PLR | | M | R | - | - | 3 | NOT RECOMMENDED | | 34951-0610 | 34951-0620 |
| | | | | | | | | 4 | - | - | | | | |
| MX150 ASSY RCP 2X3 CPA BK A/4 | 334720626 | A-BLACK | GCP | PLR | CPA | M | R | - | - | 3 | SALEABLE | | 34951-0610 | 34951-0620 |
| | | | | | | | | 4 | - | - | | | | |
| MX150 ASSY RCP 2X3 CPA LG B/4 | 334720627 | B-LIGHT GRAY | GCP | PLR | CPA | M | R | - | - | 3 | SALEABLE | | 34951-0610 | 34951-0620 |
| | | | | | | | | 4 | - | - | | | | |
| MX150 ASSY RCP 2X3 CPA BR C/4 | 334720628 | C-BROWN | GCP | PLR | CPA | M | R | - | - | 3 | NOT RECOMMENDED | | 34951-0610 | 34951-0620 |
| | | | | | | | | 4 | - | - | | | | |
| MX150 ASSY RCP 2X3 CPA GR D/4 | 334720629 | D-GREEN | GCP | PLR | CPA | M | R | - | - | 3 | NOT RECOMMENDED | | 34951-0610 | 34951-0620 |
| | | | | | | | | 4 | - | - | | | | |
| MX150 ASSY RCP 2X3 BK A/0 | 334720636 | A-BLACK | GCP | PLR | | M | R | 1 | 2 | 3 | SALEABLE | | 34951-0610 | 34951-0620 |
| | | | | | | | | 4 | 5 | 6 | | | | |
| MX150 ASSY RCP 2X3 LG B/0 | 334720637 | B-LIGHT GRAY | GCP | PLR | | M | R | 1 | 2 | 3 | SALEABLE | | 34951-0610 | 34951-0620 |
| | | | | | | | | 4 | 5 | 6 | | | | |
| MX150 ASSY RCP 2X3 BR C/0 | 334720638 | C-BROWN | GCP | PLR | | M | R | 1 | 2 | 3 | NOT RECOMMENDED | SEE PN 334720749 | 34951-0610 | 34951-0620 |
| | | | | | | | | 4 | 5 | 6 | | | | |
| MX150 ASSY RCP 2X3 GR D/0 | 334720639 | D-GREEN | GCP | PLR | | M | R | 1 | 2 | 3 | NOT RECOMMENDED | SEE PN 334720750 | 34951-0610 | 34951-0620 |
| | | | | | | | | 4 | 5 | 6 | | | | |
| MX150 ASSY RCP 2X3 BK A/2 | 334720641 | A-BLACK | GCP | PLR | | M | R | - | 2 | 3 | SALEABLE | | 34951-0610 | 34951-0620 |
| | | | | | | | | 4 | 5 | - | | | | |
| MX150 ASSY RCP 2X3 BK A/5 | 334720642 | A-BLACK | GCP | PLR | | M | R | - | - | - | SALEABLE | | 34951-0610 | 34951-0620 |
| | | | | | | | | 4 | - | - | | | | |
| MX150 ASSY RCP 2X3 CPA BK A/3 | 334720643 | A-BLACK | GCP | PLR | CPA | M | R | 1 | - | 3 | SALEABLE | | 34951-0610 | 34951-0620 |
| | | | | | | | | 4 | - | - | | | | |
| MX150 ASSY RCP 2X3 CPA LG B/3 | 334720644 | B-LIGHT GRAY | GCP | PLR | CPA | M | R | 1 | - | 3 | SALEABLE | | 34951-0610 | 34951-0620 |
| | | | | | | | | 4 | - | - | | | | |
| MX150 ASSY RCP 2X3 CPA BR C/3 | 334720645 | C-BROWN | GCP | PLR | CPA | M | R | 1 | - | 3 | NOT RECOMMENDED | | 34951-0610 | 34951-0620 |
| | | | | | | | | 4 | - | - | | | | |
| MX150 ASSY RCP 2X3 CPA GR D/3 | 334720646 | D-GREEN | GCP | PLR | CPA | M | R | 1 | - | 3 | NOT RECOMMENDED | | 34951-0610 | 34951-0620 |
| | | | | | | | | 4 | - | - | | | | |
| MX150 ASSY RCP 2X3 BK A/2 | 334720648 | A-BLACK | GCP | PLR | | M | R | 1 | - | 3 | SALEABLE | | 34951-0610 | 34951-0620 |
| | | | | | | | | 4 | - | 6 | | | | |
| MX150 ASSY RCP 2X3 LG B/2 | 334720649 | B-LIGHT GRAY | GCP | PLR | | M | R | 1 | - | 3 | SALEABLE | | 34951-0610 | 34951-0620 |
| | | | | | | | | 4 | - | 6 | | | | |
| MX150 ASSY RCP 2X3 BR C/2 | 334720650 | C-BROWN | GCP | PLR | | M | R | 1 | - | 3 | NOT RECOMMENDED | | 34951-0610 | 34951-0620 |
| | | | | | | | | 4 | - | 6 | | | | |
| MX150 ASSY RCP 2X3 GR D/2 | 334720651 | D-GREEN | GCP | PLR | | M | R | 1 | - | 3 | NOT RECOMMENDED | | 34951-0610 | 34951-0620 |
| | | | | | | | | 4 | - | 6 | | | | |
| MX150 ASSY RCP 2X3 CPA BK A/2 | 334720653 | A-BLACK | GCP | PLR | CPA | M | R | 1 | - | 3 | SALEABLE | | 34951-0610 | 34951-0620 |
| | | | | | | | | 4 | - | 6 | | | | |
| MX150 ASSY RCP 2X3 CPA LG B/2 | 334720654 | B-LIGHT GRAY | GCP | PLR | CPA | M | R | 1 | - | 3 | SALEABLE | | 34951-0610 | 34951-0620 |
| | | | | | | | | 4 | - | 6 | | | | |
| MX150 ASSY RCP 2X3 CPA BR C/2 | 334720655 | C-BROWN | GCP | PLR | CPA | M | R | 1 | - | 3 | NOT RECOMMENDED | | 34951-0610 | 34951-0620 |
| | | | | | | | | 4 | - | 6 | | | | |
| MX150 ASSY RCP 2X3 CPA GR D/2 | 334720656 | D-GREEN | GCP | PLR | CPA | M | R | 1 | - | 3 | NOT RECOMMENDED | | 34951-0610 | 34951-0620 |
| | | | | | | | | 4 | - | 6 | | | | |

molex

# MX150 RECEPTACLE 2X3 SEALED ASSEMBLY MAT SEAL
## BOM AND PIN OUT SHEET

| ASSEMBLY DESCRIPTION | ASSEMBLY PART NUMBER | COMPONENT<br>THE PRESENCE OF AN ABBREVIATION INDICATES THE PRESENCE OF THAT COMPONENT | | | | | | BLOCKED TERMINALS<br>CAVITY WITH A NUMBER INDICATES BLOCKED TERMINAL POSITION<br>CAVITY WITHOUT A NUMBER INDICATES OPEN TERMINAL POSITION | | | STATUS | COMMENT | OPTIONAL ATTACHMENTS SOLD SEPARATELY | |
|---|---|---|---|---|---|---|---|---|---|---|---|---|---|---|
| | | HOUSING KEY/COLOR | GROMMET CAP | PLR | CPA | MAT SEAL | RING SEAL | | | | | | BACKSHELL WITH RIBS | BACKSHELL WITHOUT RIBS |
| MX150 ASSY RCP 2X3 BK A/5 | 334720658 | A-BLACK | GCP | PLR | | M | R | - | - | 3 | SALEABLE | | 34951-0610 | 34951-0620 |
| | | | | | | | | - | - | - | | | | |
| MX150 ASSY RCP 2X3 BK A/3 | 334720659 | A-BLACK | GCP | PLR | | M | R | - | - | 3 | SALEABLE | | 34951-0610 | 34951-0620 |
| | | | | | | | | - | 5 | 6 | | | | |
| MX150 ASSY RCP 2X3 CPA BK A/0 | 334720660 | A-BLACK | GCP | PLR | CPA | M | R | 1 | 2 | 3 | SALEABLE | | 34951-0610 | 34951-0620 |
| | | | | | | | | 4 | 5 | 6 | | | | |
| MX150 ASSY RCP 2X3 BK A/5 | 334720661 | A-BLACK | GCP | PLR | | M | R | - | 2 | - | SALEABLE | | 34951-0610 | 34951-0620 |
| | | | | | | | | - | - | - | | | | |
| MX150 ASSY RCP 2X3 BK A/4 | 334720662 | A-BLACK | GCP | PLR | | M | R | - | 2 | - | SALEABLE | | 34951-0610 | 34951-0620 |
| | | | | | | | | - | 5 | - | | | | |
| MX150 ASSY RCP 2X3 BK A/4 | 334720663 | A-BLACK | GCP | PLR | | M | R | - | - | - | SALEABLE | | 34951-0610 | 34951-0620 |
| | | | | | | | | - | 5 | 6 | | | | |
| MX150 ASSY RCP 2X3 BK A/3 | 334720664 | A-BLACK | GCP | PLR | | M | R | - | - | - | SALEABLE | | 34951-0610 | 34951-0620 |
| | | | | | | | | 4 | 5 | 6 | | | | |
| MX150 ASSY RCP 2X3 BK A/5 | 334720665 | A-BLACK | GCP | PLR | | M | R | 1 | - | - | SALEABLE | | 34951-0610 | 34951-0620 |
| | | | | | | | | - | - | - | | | | |
| MX150 ASSY RCP 2X3 BK A/3 | 334720666 | A-BLACK | GCP | PLR | | M | R | - | 2 | - | SALEABLE | | 34951-0610 | 34951-0620 |
| | | | | | | | | - | 5 | 6 | | | | |
| MX150 ASSY RCP 2X3 BK A/2 | 334720667 | A-BLACK | GCP | PLR | | M | R | 1 | - | 3 | SALEABLE | | 34951-0610 | 34951-0620 |
| | | | | | | | | - | 5 | 6 | | | | |
| MX150 ASSY RCP 2X3 DG C/6 | 334720668 | C-DARK GRAY | GCO | PLR | | M | R | - | - | - | SALEABLE | | 34951-0610 | 34951-0620 |
| | | | | | | | | - | - | - | | | | |
| MX150 ASSY RCP 2X3 SG D/6 | 334720669 | D-STONE GRAY | GCO | PLR | | M | R | - | - | - | SALEABLE | | 34951-0610 | 34951-0620 |
| | | | | | | | | - | - | - | | | | |
| MX150 ASSY RCP 2X3 CPA DG C/6 | 334720670 | C-DARK GRAY | GCO | PLR | CPA | M | R | - | - | - | SALEABLE | | 34951-0610 | 34951-0620 |
| | | | | | | | | - | - | - | | | | |
| MX150 ASSY RCP 2X3 CPA SG D/6 | 334720671 | D-STONE GRAY | GCO | PLR | CPA | M | R | - | - | - | SALEABLE | | 34951-0610 | 34951-0620 |
| | | | | | | | | - | - | - | | | | |
| MX150 ASSY RCP 2X3 LG B/5 | 334720672 | B-LIGHT GRAY | GCP | PLR | | M | R | - | - | - | SALEABLE | | 34951-0610 | 34951-0620 |
| | | | | | | | | - | 5 | - | | | | |
| MX150 ASSY RCP 2X3 BK A/5 | 334720673 | A-BLACK | GCP | PLR | | M | R | - | - | - | SALEABLE | | 34951-0610 | 34951-0620 |
| | | | | | | | | - | - | 6 | | | | |
| MX150 ASSY RCP 2X3 CPA BK A/4 | 334720674 | A-BLACK | GCP | PLR | CPA | M | R | - | - | - | SALEABLE | | 34951-0610 | 34951-0620 |
| | | | | | | | | - | 5 | 6 | | | | |
| MX150 ASSY RCP 2X3 CPA BK A/5 | 334720675 | A-BLACK | GCP | PLR | CPA | M | R | - | - | - | SALEABLE | | 34951-0610 | 34951-0620 |
| | | | | | | | | - | - | 6 | | | | |
| MX150 ASSY RCP 2X3 CPA LG B/4 | 334720676 | B-LIGHT GRAY | GCP | PLR | CPA | M | R | 1 | - | - | SALEABLE | | 34951-0610 | 34951-0620 |
| | | | | | | | | - | 5 | - | | | | |
| MX150 ASSY RCP 2X3 LG B/4 | 334720677 | B-LIGHT GRAY | GCP | PLR | | M | R | 1 | - | - | SALEABLE | | 34951-0610 | 34951-0620 |
| | | | | | | | | - | 5 | - | | | | |
| MX150 ASSY RCP 2X3 LG B/4 | 334720678 | B-LIGHT GRAY | GCP | PLR | | M | R | - | - | - | SALEABLE | | 34951-0610 | 34951-0620 |
| | | | | | | | | - | 5 | 6 | | | | |
| MX150 ASSY RCP 2X3 CPA BK A/3 | 334720679 | A-BLACK | GCP | PLR | CPA | M | R | 1 | 2 | 3 | SALEABLE | | 34951-0610 | 34951-0620 |
| | | | | | | | | - | - | - | | | | |
| MX150 ASSY RCP 2X3 BK A/3 | 334720680 | A-BLACK | GCP | PLR | | M | R | 1 | 2 | 3 | SALEABLE | | 34951-0610 | 34951-0620 |
| | | | | | | | | - | - | - | | | | |
| MX150 ASSY RCP 2X3 CPA BK A/5 | 334720681 | A-BLACK | GCP | PLR | CPA | M | R | - | 2 | - | SALEABLE | | 34951-0610 | 34951-0620 |
| | | | | | | | | - | - | - | | | | |
| MX150 ASSY RCP 2X3 CPA YW A/6 | 334720682 | A-YELLOW | GCO | PLR | CPA | M | R | - | - | - | SALEABLE | | 34951-0610 | 34951-0620 |
| | | | | | | | | - | - | - | | | | |
| MX150 ASSY RCP 2X3 BK A/2 | 334720683 | A-BLACK | GCP | PLR | | M | R | - | - | 3 | SALEABLE | | 34951-0610 | 34951-0620 |
| | | | | | | | | 4 | 5 | 6 | | | | |
| MX150 ASSY RCP 2X3 CPA BK A/4 | 334720684 | A-BLACK | GCP | PLR | CPA | M | R | - | 2 | 3 | SALEABLE | | 34951-0610 | 34951-0620 |
| | | | | | | | | - | - | - | | | | |

molex

# MX150 RECEPTACLE 2X3 SEALED ASSEMBLY MAT SEAL
## BOM AND PIN OUT SHEET

| ASSEMBLY DESCRIPTION | ASSEMBLY PART NUMBER | COMPONENT | | | | | | BLOCKED TERMINALS | | | STATUS | COMMENT | OPTIONAL ATTACHMENTS SOLD SEPARATELY | |
|---|---|---|---|---|---|---|---|---|---|---|---|---|---|---|
| | | THE PRESENCE OF AN ABBREVIATION INDICATES THE PRESENCE OF THAT COMPONENT | | | | | | CAVITY WITH A NUMBER INDICATES BLOCKED TERMINAL POSITION<br>CAVITY WITHOUT A NUMBER INDICATES OPEN TERMINAL POSITION | | | | | | |
| | | HOUSING KEY/COLOR | GROMMET CAP | PLR | CPA | MAT SEAL | RING SEAL | | | | | | BACKSHELL WITH RIBS | BACKSHELL WITHOUT RIBS |
| MX150 ASSY RCP 2X3 CPA LG B/0 | 334720685 | B-LIGHT GRAY | GCP | PLR | CPA | M | R | 1 | 2 | 3 | SALEABLE | | 34951-0610 | 34951-0620 |
| | | | | | | | | 4 | 5 | 6 | | | | |
| MX150 ASSY RCP 2X3 CPA LG B/4 | 334720686 | B-LIGHT GRAY | GCP | PLR | CPA | M | R | - | 2 | 3 | SALEABLE | | 34951-0610 | 34951-0620 |
| | | | | | | | | - | - | - | | | | |
| MX150 ASSY RCP 2X3 BK A/3 | 334720687 | A-BLACK | GCP | PLR | | M | R | 1 | - | 3 | SALEABLE | | 34951-0610 | 34951-0620 |
| | | | | | | | | 4 | - | - | | | | |
| MX150 ASSY RCP 2X3 CPA BK A/3 | 334720688 | A-BLACK | GCP | PLR | CPA | M | R | - | - | - | SALEABLE | | 34951-0610 | 34951-0620 |
| | | | | | | | | 4 | 5 | 6 | | | | |
| MX150 ASSY RCP 2X3 CPA BK A/5 | 334720689 | A-BLACK | GCP | PLR | CPA | M | R | - | - | - | SALEABLE | | 34951-0610 | 34951-0620 |
| | | | | | | | | 4 | - | - | | | | |
| MX150 ASSY RCP 2X3 CPA LG B/5 | 334720690 | B-LIGHT GRAY | GCP | PLR | CPA | M | R | - | - | - | SALEABLE | | 34951-0610 | 34951-0620 |
| | | | | | | | | 4 | - | - | | | | |
| MX150 ASSY RCP 2X3 CPA BK A/3 | 334720691 | A-BLACK | GCP | PLR | CPA | M | R | 1 | - | 3 | SALEABLE | | 34951-0610 | 34951-0620 |
| | | | | | | | | - | 5 | - | | | | |
| MX150 ASSY RCP 2X3 CPA BK A/3 | 334720692 | A-BLACK | GCP | PLR | CPA | M | R | - | 2 | - | SALEABLE | | 34951-0610 | 34951-0620 |
| | | | | | | | | 4 | - | 6 | | | | |
| MX150 ASSY RCP 2X3 CS BK A/6 | 334720701 | A-BLACK-CLIP | GCO | PLR | | M | R | - | - | - | SALEABLE | | N/A | N/A |
| | | | | | | | | - | - | - | | | | |
| MX150 ASSY RCP 2X3 CS LG B/6 | 334720702 | B-LIGHT GRAY-CLIP | GCO | PLR | | M | R | - | - | - | SALEABLE | | N/A | N/A |
| | | | | | | | | - | - | - | | | | |
| MX150 ASSY RCP 2X3 CS BR C/6 | 334720703 | C-BROWN-CLIP | GCO | PLR | | M | R | - | - | - | NOT RECOMMENDED | SEE PN 334720714 | N/A | N/A |
| | | | | | | | | - | - | - | | | | |
| MX150 ASSY RCP 2X3 CS GR D/6 | 334720704 | D-GREEN-CLIP | GCO | PLR | | M | R | - | - | - | NOT RECOMMENDED | SEE PN 334720715 | N/A | N/A |
| | | | | | | | | - | - | - | | | | |
| MX150 ASSY RCP 2X3 CS CPA BK A/6 | 334720705 | A-BLACK-CLIP | GCO | PLR | CPA | M | R | - | - | - | SALEABLE | | N/A | N/A |
| | | | | | | | | - | - | - | | | | |
| MX150 ASSY RCP 2X3 CS CPA LG B/6 | 334720706 | B-LIGHT GRAY-CLIP | GCO | PLR | CPA | M | R | - | - | - | SALEABLE | | N/A | N/A |
| | | | | | | | | - | - | - | | | | |
| MX150 ASSY RCP 2X3 CS CPA BR C/6 | 334720707 | C-BROWN-CLIP | GCO | PLR | CPA | M | R | - | - | - | NOT RECOMMENDED | SEE PN 334720716 | N/A | N/A |
| | | | | | | | | - | - | - | | | | |
| MX150 ASSY RCP 2X3 CS CPA GR D/6 | 334720708 | D-GREEN-CLIP | GCO | PLR | CPA | M | R | - | - | - | NOT RECOMMENDED | SEE PN 334720717 | N/A | N/A |
| | | | | | | | | - | - | - | | | | |
| MX150 ASSY RCP 2X3 CS BK A/5 | 334720709 | A-BLACK-CLIP | GCP | PLR | | M | R | - | - | 3 | SALEABLE | | N/A | N/A |
| | | | | | | | | - | - | - | | | | |
| MX150 ASSY RCP 2X3 CS BK A/2 | 334720710 | A-BLACK-CLIP | GCP | PLR | | M | R | - | 2 | 3 | SALEABLE | | N/A | N/A |
| | | | | | | | | 4 | 5 | - | | | | |
| MX150 ASSY RCP 2X3 CS BK A/4 | 334720711 | A-BLACK-CLIP | GCP | PLR | | M | R | - | - | - | SALEABLE | | N/A | N/A |
| | | | | | | | | - | 5 | 6 | | | | |
| MX150 ASSY RCP 2X3 CS BK A/4 | 334720712 | A-BLACK-CLIP | GCP | PLR | | M | R | - | - | 3 | SALEABLE | | N/A | N/A |
| | | | | | | | | 4 | - | - | | | | |
| MX150 ASSY RCP 2X3 CS LG B/4 | 334720713 | B-LIGHT GRAY-CLIP | GCP | PLR | | M | R | 1 | - | - | SALEABLE | | N/A | N/A |
| | | | | | | | | - | 5 | - | | | | |
| MX150 ASSY RCP 2X3 CS DG C/6 | 334720714 | C-DARK GRAY-CLIP | GCO | PLR | | M | R | - | - | - | SALEABLE | | N/A | N/A |
| | | | | | | | | - | - | - | | | | |
| MX150 ASSY RCP 2X3 CS SG D/6 | 334720715 | D-STONE GRAY-CLIP | GCO | PLR | | M | R | - | - | - | SALEABLE | | N/A | N/A |
| | | | | | | | | - | - | - | | | | |
| MX150 ASSY RCP 2X3 CS CPA DG C/6 | 334720716 | C-DARK GRAY-CLIP | GCO | PLR | CPA | M | R | - | - | - | SALEABLE | | N/A | N/A |
| | | | | | | | | - | - | - | | | | |
| MX150 ASSY RCP 2X3 CS CPA SG D/6 | 334720717 | D-STONE GRAY-CLIP | GCO | PLR | CPA | M | R | - | - | - | SALEABLE | | N/A | N/A |
| | | | | | | | | - | - | - | | | | |
| MX150 ASSY RCP 2X3 CS BK A/4 | 334720718 | A-BLACK-CLIP | GCP | PLR | | M | R | - | - | 3 | SALEABLE | | N/A | N/A |
| | | | | | | | | - | - | 6 | | | | |
| MX150 ASSY RCP 2X3 CS CPA LG B/4 | 334720719 | B-LIGHT GRAY-CLIP | GCP | PLR | CPA | M | R | 1 | - | - | SALEABLE | | N/A | N/A |
| | | | | | | | | - | 5 | - | | | | |

molex

# MX150 RECEPTACLE 2X3 SEALED ASSEMBLY MAT SEAL
## BOM AND PIN OUT SHEET

| ASSEMBLY DESCRIPTION | ASSEMBLY PART NUMBER | COMPONENT | | | | | | BLOCKED TERMINALS | | | STATUS | COMMENT | OPTIONAL ATTACHMENTS SOLD SEPARATELY | |
|---|---|---|---|---|---|---|---|---|---|---|---|---|---|---|
| | | THE PRESENCE OF AN ABBREVIATION INDICATES THE PRESENCE OF THAT COMPONENT | | | | | | CAVITY WITH A NUMBER INDICATES BLOCKED TERMINAL POSITION<br>CAVITY WITHOUT A NUMBER INDICATES OPEN TERMINAL POSITION | | | | | | |
| | | HOUSING KEY/COLOR | GROMMET CAP | PLR | CPA | MAT SEAL | RING SEAL | | | | | | BACKSHELL WITH RIBS | BACKSHELL WITHOUT RIBS |
| MX150 ASSY RCP 2X3 CS LG B/5 | 334720720 | B-LIGHT GRAY-CLIP | GCP | PLR | | M | R | - | - | - | SALEABLE | | N/A | N/A |
| | | | | | | | | - | 5 | - | | | | |
| MX150 ASSY RCP 2X3 CS DG C/5 | 334720721 | C-DARK GRAY-CLIP | GCP | PLR | | M | R | - | - | 3 | SALEABLE | | N/A | N/A |
| | | | | | | | | - | - | - | | | | |
| MX150 ASSY RCP 2X3 CS BK A/3 | 334720722 | A-BLACK-CLIP | GCP | PLR | | M | R | - | - | - | SALEABLE | | N/A | N/A |
| | | | | | | | | 4 | 5 | 6 | | | | |
| MX150 ASSY RCP 2X3 CS BK A/2 | 334720723 | A-BLACK-CLIP | GCP | PLR | | M | R | - | 2 | 3 | SALEABLE | | N/A | N/A |
| | | | | | | | | - | 5 | 6 | | | | |
| MX150 ASSY RCP 2X3 CS BK A/4 | 334720724 | A-BLACK-CLIP | GCP | PLR | | M | R | - | 2 | - | SALEABLE | | N/A | N/A |
| | | | | | | | | - | - | 6 | | | | |
| MX150 ASSY RCP 2X3 CS BK A/3 | 334720725 | A-BLACK-CLIP | GCP | PLR | | M | R | - | - | 3 | SALEABLE | | N/A | N/A |
| | | | | | | | | - | 5 | 6 | | | | |
| MX150 ASSY RCP 2X3 CS BK A/5 | 334720726 | A-BLACK-CLIP | GCP | PLR | | M | R | - | - | - | SALEABLE | | N/A | N/A |
| | | | | | | | | - | - | 6 | | | | |
| MX150 ASSY RCP 2X3 CS BK A/1 | 334720727 | A-BLACK-CLIP | GCP | PLR | | M | R | - | 2 | 3 | SALEABLE | | N/A | N/A |
| | | | | | | | | 4 | 5 | 6 | | | | |
| MX150 ASSY RCP 2X3 CS BK A/4 | 334720728 | A-BLACK-CLIP | GCP | PLR | | M | R | 1 | - | - | SALEABLE | | N/A | N/A |
| | | | | | | | | - | - | 6 | | | | |
| MX150 ASSY RCP 2X3 CS BK A/0 | 334720729 | A-BLACK-CLIP | GCP | PLR | | M | R | 1 | 2 | 3 | SALEABLE | | N/A | N/A |
| | | | | | | | | 4 | 5 | 6 | | | | |
| MX150 ASSY RCP 2X3 CS BK A/5 | 334720730 | A-BLACK-CLIP | GCP | PLR | | M | R | - | - | - | SALEABLE | | N/A | N/A |
| | | | | | | | | 4 | - | - | | | | |
| MX150 ASSY RCP 2X3 CS BK A/4 | 334720731 | A-BLACK-CLIP | GCP | PLR | | M | R | - | - | - | SALEABLE | | N/A | N/A |
| | | | | | | | | 4 | - | 6 | | | | |
| MX150 ASSY RCP 2X3 CS LG B/3 | 334720732 | B-LIGHT GRAY-CLIP | GCP | PLR | | M | R | - | - | - | SALEABLE | | N/A | N/A |
| | | | | | | | | 4 | 5 | 6 | | | | |
| MX150 ASSY RCP 2X3 CPA BK A/4 | 334720733 | A-BLACK | GCP | PLR | CPA | M | R | - | 2 | - | SALEABLE | | 34951-0610 | 34951-0620 |
| | | | | | | | | - | 5 | - | | | | |
| MX150 ASSY RCP 2X3 CS BK A/5 | 334720734 | A-BLACK-CLIP | GCP | PLR | | M | R | - | - | - | SALEABLE | | N/A | N/A |
| | | | | | | | | - | 5 | - | | | | |
| MX150 ASSY RCP 2X3 BK A/5 | 334720735 | A-BLACK | GCP | PLR | | M | R | - | - | - | SALEABLE | | 34951-0610 | 34951-0620 |
| | | | | | | | | - | 5 | - | | | | |
| MX150 ASSY RCP 2X3 LG B/3 | 334720736 | B-LIGHT GRAY | GCP | PLR | | M | R | - | - | - | SALEABLE | | 34951-0610 | 34951-0620 |
| | | | | | | | | 4 | 5 | 6 | | | | |
| MX150 ASSY RCP 2X3 CPA BK A/5 | 334720737 | A-BLACK | GCP | PLR | CPA | M | R | 1 | - | - | SALEABLE | | 34951-0610 | 34951-0620 |
| | | | | | | | | - | - | - | | | | |
| MX150 ASSY RCP 2X3 CPA LG B/5 | 334720738 | B-LIGHT GRAY | GCP | PLR | CPA | M | R | 1 | - | - | SALEABLE | | 34951-0610 | 34951-0620 |
| | | | | | | | | - | - | - | | | | |
| MX150 ASSY RCP 2X3 CS CPA BK A/2 | 334720739 | A-BLACK-CLIP | GCP | PLR | CPA | M | R | 1 | 2 | - | SALEABLE | | N/A | N/A |
| | | | | | | | | - | 5 | 6 | | | | |
| MX150 ASSY RCP 2X3 CS CPA BK A/2 | 334720740 | A-BLACK-CLIP | GCP | PLR | CPA | M | R | - | 2 | 3 | SALEABLE | | N/A | N/A |
| | | | | | | | | 4 | 5 | - | | | | |
| MX150 ASSY RCP 2X3 BK A/4 | 334720741 | A-BLACK | GCP | PLR | | M | R | - | - | 3 | SALEABLE | | 34951-0610 | 34951-0620 |
| | | | | | | | | - | - | 6 | | | | |
| MX150 ASSY RCP 2X3 BK A/3 | 334720742 | A-BLACK | GCP | PLR | | M | R | 1 | - | - | SALEABLE | | 34951-0610 | 34951-0620 |
| | | | | | | | | - | 5 | 6 | | | | |
| MX150 ASSY RCP 2X3 LG B/3 | 334720743 | B-LIGHT GRAY | GCP | PLR | | M | R | 1 | - | - | SALEABLE | | 34951-0610 | 34951-0620 |
| | | | | | | | | - | 5 | 6 | | | | |
| MX150 ASSY RCP 2X3 CS CPA BK A/5 | 334720744 | A-BLACK-CLIP | GCP | PLR | CPA | M | R | - | - | 3 | SALEABLE | | N/A | N/A |
| | | | | | | | | - | - | - | | | | |
| MX150 ASSY RCP 2X3 CS BK A/4 | 334720745 | A-BLACK-CLIP | GCP | PLR | | M | R | 1 | - | - | SALEABLE | | N/A | N/A |
| | | | | | | | | 4 | - | - | | | | |
| MX150 ASSY RCP 2X3 CPA LG B/3 | 334720746 | B-LIGHT GRAY | GCP | PLR | CPA | M | R | - | - | - | SALEABLE | | 34951-0610 | 34951-0620 |
| | | | | | | | | 4 | 5 | 6 | | | | |

molex

# MX150 RECEPTACLE 2X3 SEALED ASSEMBLY MAT SEAL
## BOM AND PIN OUT SHEET

| ASSEMBLY DESCRIPTION | ASSEMBLY PART NUMBER | COMPONENT | | | | | | BLOCKED TERMINALS | | | STATUS | COMMENT | OPTIONAL ATTACHMENTS SOLD SEPARATELY | |
|---|---|---|---|---|---|---|---|---|---|---|---|---|---|---|
| | | THE PRESENCE OF AN ABBREVIATION INDICATES THE PRESENCE OF THAT COMPONENT | | | | | | CAVITY WITH A NUMBER INDICATES BLOCKED TERMINAL POSITION<br>CAVITY WITHOUT A NUMBER INDICATES OPEN TERMINAL POSITION | | | | | | |
| | | HOUSING KEY/COLOR | GROMMET CAP | PLR | CPA | MAT SEAL | RING SEAL | | | | | | BACKSHELL WITH RIBS | BACKSHELL WITHOUT RIBS |
| MX150 ASSY RCP 2X3 CPA BK A/2 | 334720747 | A-BLACK | GCP | PLR | CPA | M | R | - | 2 | 3 | SALEABLE | | 34951-0610 | 34951-0620 |
| | | | | | | | | 4 | 5 | - | | | | |
| MX150 ASSY RCP 2X3 DG C/5 | 334720748 | C-DARK GRAY | GCP | PLR | | M | R | - | - | - | SALEABLE | | 34951-0610 | 34951-0620 |
| | | | | | | | | - | - | 6 | | | | |
| MX150 ASSY RCP 2X3 DG C/0 | 334720749 | C-DARK GRAY | GCP | PLR | | M | R | 1 | 2 | 3 | SALEABLE | | 34951-0610 | 34951-0620 |
| | | | | | | | | 4 | 5 | 6 | | | | |
| MX150 ASSY RCP 2X3 SG D/0 | 334720750 | D-STONE GRAY | GCP | PLR | | M | R | 1 | 2 | 3 | SALEABLE | | 34951-0610 | 34951-0620 |
| | | | | | | | | 4 | 5 | 6 | | | | |
| MX150 ASSY RCP 2X3 BK A/4 | 334720751 | A-BLACK | GCP | PLR | | M | R | - | 2 | 3 | SALEABLE | | 34951-0610 | 34951-0620 |
| | | | | | | | | - | - | - | | | | |
| MX150 ASSY RCP 2X3 CS CPA BK A/3 | 334720752 | A-BLACK-CLIP | GCP | PLR | CPA | M | R | 1 | - | - | SALEABLE | | N/A | N/A |
| | | | | | | | | - | 5 | 6 | | | | |
| MX150 ASSY RCP 2X3 CS CPA BK A/5 | 334720753 | A-BLACK-CLIP | GCP | PLR | CPA | M | R | - | - | - | SALEABLE | | N/A | N/A |
| | | | | | | | | - | - | 6 | | | | |
| MX150 ASSY RCP 2X3 CPA BK A/5 | 334720754 | A-BLACK | GCP | PLR | CPA | M | R | - | - | - | SALEABLE | | 34951-0610 | 34951-0620 |
| | | | | | | | | - | 5 | - | | | | |
| MX150 ASSY RCP 2X3 CS CPA BK A/4 | 334720755 | A-BLACK-CLIP | GCP | PLR | CPA | M | R | - | - | - | SALEABLE | | N/A | N/A |
| | | | | | | | | - | 5 | 6 | | | | |
| MX150 ASSY RCP 2X3 CPA BK A/2 | 334720756 | A-BLACK | GCP | PLR | CPA | M | R | 1 | 2 | 3 | SALEABLE | | 34951-0610 | 34951-0620 |
| | | | | | | | | 4 | - | - | | | | |
| MX150 ASSY RCP 2X3 LG B/5 | 334720757 | B-LIGHT GRAY | GCP | PLR | | M | R | 1 | - | - | SALEABLE | | 34951-0610 | 34951-0620 |
| | | | | | | | | - | - | - | | | | |
| MX150 ASSY RCP 2X3 CS BK A/3 | 334727001 | A-BLACK-CLIP | GCP | PLR | | M | R | - | - | 3 | SALEABLE | | N/A | N/A |
| | | | | | | | | 4 | - | 6 | | | | |
| MX150 ASSY RCP 2X3 CPA LG B/3 | 334727002 | B-LIGHT GRAY | GCP | PLR | CPA | M | R | 1 | - | - | SALEABLE | | 34951-0610 | 34951-0620 |
| | | | | | | | | - | 5 | 6 | | | | |
| MX150 ASSY RCP 2X3 DG C/5 | 334727003 | C-DARK GRAY | GCP | PLR | | M | R | - | - | - | SALEABLE | | 34951-0610 | 34951-0620 |
| | | | | | | | | - | 5 | - | | | | |
| MX150 ASSY RCP 2X3 LG B/5 | 334727004 | B-LIGHT GRAY | GCP | PLR | | M | R | - | - | - | SALEABLE | | 34951-0610 | 34951-0620 |
| | | | | | | | | - | - | 6 | | | | |
| MX150 ASSY RCP 2X3 CPA SG D/5 | 334727005 | D-STONE GRAY | GCP | PLR | CPA | M | R | 1 | - | - | SALEABLE | | 34951-0610 | 34951-0620 |
| | | | | | | | | - | - | - | | | | |
| MX150 ASSY RCP 2X3 CS SG D/5 | 334727006 | D-STONE GRAY-CLIP | GCP | PLR | | M | R | 1 | - | - | SALEABLE | | N/A | N/A |
| | | | | | | | | - | - | - | | | | |
| MX150 ASSY RCP 2X3 CS CPA SG D/5 | 334727007 | D-STONE GRAY-CLIP | GCP | PLR | CPA | M | R | 1 | - | - | SALEABLE | | N/A | N/A |
| | | | | | | | | - | - | - | | | | |
| MX150 ASSY RCP 2X3 CS CPA DG C/5 | 334727008 | C-DARK GRAY-CLIP | GCP | PLR | CPA | M | R | 1 | - | - | SALEABLE | | N/A | N/A |
| | | | | | | | | - | - | - | | | | |
| MX150 ASSY RCP 2X3 CPA DG C/5 | 334727009 | C-DARK GRAY | GCP | PLR | CPA | M | R | 1 | - | - | SALEABLE | | 34951-0610 | 34951-0620 |
| | | | | | | | | - | - | - | | | | |
| MX150 ASSY RCP 2X3 CS BK A/3 | 334727010 | A-BLACK-CLIP | GCP | PLR | | M | R | - | 2 | - | SALEABLE | | N/A | N/A |
| | | | | | | | | - | 5 | 6 | | | | |
| MX150 ASSY RCP 2X3 CPA YW A/2 | 334727011 | A-YELLOW | GCP | PLR | CPA | M | R | 1 | 2 | 3 | SALEABLE | | 34951-0610 | 34951-0620 |
| | | | | | | | | 4 | - | - | | | | |
| MX150 ASSY RCP 2X3 CPA DG C/2 | 334727012 | C-DARK GRAY | GCP | PLR | CPA | M | R | - | - | 3 | SALEABLE | | 34951-0610 | 34951-0620 |
| | | | | | | | | 4 | 5 | 6 | | | | |
| MX150 ASSY RCP 2X3 CPA LG B/4 | 334727013 | B-LIGHT GRAY | GCP | PLR | CPA | M | R | - | - | - | SALEABLE | | 34951-0610 | 34951-0620 |
| | | | | | | | | - | 5 | 6 | | | | |
| MX150 ASSY RCP 2X3 BK A/4 | 334727014 | A-BLACK | GCP | PLR | | M | R | - | - | - | SALEABLE | | 34951-0610 | 34951-0620 |
| | | | | | | | | 4 | 5 | - | | | | |
| MX150 ASSY RCP 2X3 CS BK A/2 | 334727015 | A-BLACK-CLIP | GCP | PLR | | M | R | 1 | - | 3 | SALEABLE | | N/A | N/A |
| | | | | | | | | 4 | - | 6 | | | | |
| MX150 ASSY RCP 2X3 CS CPA BK A/5 | 334727016 | A-BLACK-CLIP | GCP | PLR | CPA | M | R | - | - | - | SALEABLE | | N/A | N/A |
| | | | | | | | | - | 5 | - | | | | |

molex

# MX150 RECEPTACLE 2X3 SEALED ASSEMBLY MAT SEAL
## BOM AND PIN OUT SHEET

| ASSEMBLY DESCRIPTION | ASSEMBLY PART NUMBER | COMPONENT<br>THE PRESENCE OF AN ABBREVIATION INDICATES THE PRESENCE OF THAT COMPONENT | | | | | | BLOCKED TERMINALS<br>CAVITY WITH A NUMBER INDICATES BLOCKED TERMINAL POSITION<br>CAVITY WITHOUT A NUMBER INDICATES OPEN TERMINAL POSITION | | | STATUS | COMMENT | OPTIONAL ATTACHMENTS SOLD SEPARATELY | |
|---|---|---|---|---|---|---|---|---|---|---|---|---|---|---|
| | | HOUSING KEY/COLOR | GROMMET CAP | PLR | CPA | MAT SEAL | RING SEAL | | | | | | BACKSHELL WITH RIBS | BACKSHELL WITHOUT RIBS |
| MX150 ASSY RCP 2X3 CPA DG C/3 | 334727017 | C-DARK GRAY | GCP | PLR | CPA | M | R | - | - | - | SALEABLE | | 34951-0610 | 34951-0620 |
| | | | | | | | | 4 | 5 | 6 | | | | |
| MX150 ASSY RCP 2X3 CPA DG C/4 | 334727018 | C-DARK GRAY | GCP | PLR | CPA | M | R | - | - | - | SALEABLE | | 34951-0610 | 34951-0620 |
| | | | | | | | | - | 5 | 6 | | | | |
| MX150 ASSY RCP 2X3 LG B/3 | 334727019 | B-LIGHT GRAY | GCP | PLR | | M | R | - | 2 | - | SALEABLE | | 34951-0610 | 34951-0620 |
| | | | | | | | | - | 5 | 6 | | | | |
| MX150 ASSY RCP 2X3 CS CPA LG B/4 | 334727020 | B-LIGHT GRAY-CLIP | GCP | PLR | CPA | M | R | - | - | - | SALEABLE | | N/A | N/A |
| | | | | | | | | - | 5 | 6 | | | | |
| MX150 ASSY RCP 2X3 CS CPA BK A/4 | 334727021 | A-BLACK-CLIP | GCP | PLR | CPA | M | R | - | - | 3 | SALEABLE | | N/A | N/A |
| | | | | | | | | 4 | - | - | | | | |
| MX150 ASSY RCP 2X3 CPA BK A/4 | 334727022 | A-BLACK | GCP | PLR | CPA | M | R | - | - | - | SALEABLE | | 34951-0610 | 34951-0620 |
| | | | | | | | | 4 | - | 6 | | | | |
| MX150 ASSY RCP 2X3 CS LG B/3 | 334727023 | B-LIGHT GRAY-CLIP | GCP | PLR | | M | R | - | 2 | - | SALEABLE | | N/A | N/A |
| | | | | | | | | - | 5 | 6 | | | | |
| MX150 ASSY RCP 2X3 CS CPA BK A/2 | 334727024 | A-BLACK-CLIP | GCP | PLR | CPA | M | R | 1 | - | 3 | SALEABLE | | N/A | N/A |
| | | | | | | | | 4 | - | 6 | | | | |
| MX150 ASSY RCP 2X3 CPA BK A/3 | 334727025 | A-BLACK | GCP | PLR | CPA | M | R | 1 | - | - | SALEABLE | | 34951-0610 | 34951-0620 |
| | | | | | | | | 4 | 5 | - | | | | |
| MX150 ASSY RCP 2X3 CS CPA BK A/2 | 334727026 | A-BLACK-CLIP | GCP | PLR | CPA | M | R | - | - | 3 | SALEABLE | | N/A | N/A |
| | | | | | | | | 4 | 5 | 6 | | | | |
| MX150 ASSY RCP 2X3 CS CPA BK A/3 | 334727027 | A-BLACK-CLIP | GCP | PLR | CPA | M | R | - | - | 3 | SALEABLE | | N/A | N/A |
| | | | | | | | | 4 | 5 | - | | | | |
| MX150 ASSY RCP 2X3 CPA BK A/2 | 334727028 | A-BLACK | GCP | PLR | CPA | M | R | 1 | 2 | - | SALEABLE | | 34951-0610 | 34951-0620 |
| | | | | | | | | 4 | 5 | - | | | | |
| MX150 ASSY RCP 2X3 CPA BK A/4 | 334727029 | A-BLACK | GCP | PLR | CPA | M | R | - | - | 3 | SALEABLE | | 34951-0610 | 34951-0620 |
| | | | | | | | | - | - | 6 | | | | |
| MX150 ASSY RCP 2X3 CPA BK A/2 | 334727030 | A-BLACK | GCP | PLR | CPA | M | R | - | - | 3 | SALEABLE | | 34951-0610 | 34951-0620 |
| | | | | | | | | 4 | 5 | 6 | | | | |

# TABLE OF CONTENTS


| SHEET NO. | SHEET DESCRIPTION |
|---|---|
| 1 | NOTES AND BOM |
| 2 | CONFIGURATIONS |
| 3-4 | KEY CONFIGURATIONS |
| 5 | RECEPTACLE CONNECTOR ASSEMBLY |
| 6 | BACKSHELL NOTES |
| 7-8 | BACKSHELL |
| 9-10 | BACKSHELL CONFIGURATIONS |
| 11 | 2X10 CONNECTOR INTERFACE DEFINITION |


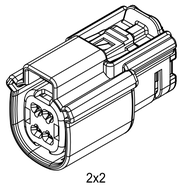

2x2

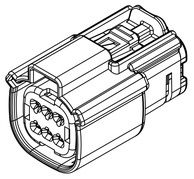

2x3

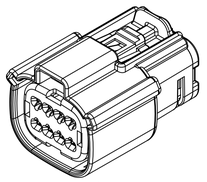

2x4

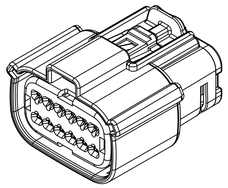

2x6

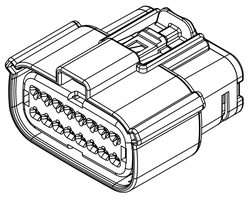

2x8

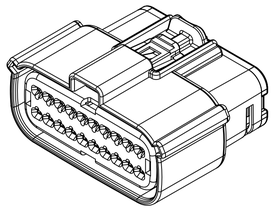

2x10

NOTES: VALID UNLESS OTHERWISE SPECIFIED

1. GENERAL:

a. APPLICATION SPECIFICATION SEE: AS-33472-100
- -CONTAINS: PRODUCT INTRODUCTION, PRODUCT SUMMARY, CONNECTOR ASSEMBLY, PACKAGING INFORMATION, CONNECTOR MATING, SERVICE INSTRUCTIONS, ELECTRICAL CONTINUITY CHECKING, CRIMPING, AND TROUBLESHOOTING.
- -DESIGNED TO MATE WITH DEVICE OR CONNECTOR AS SPECIFIED IN THE MATING INTERFACE/CONNECTOR DRAWINGS CHART.
- *DENOTES DRAWINGS THAT CAN BE ACCESSED AT <http://ewcap.uscarteams.org/>.
- -ASSEMBLY SHIPPED WITH PLR IN PRE-LOCK POSITION (SEE PLR PRE-LOCK VIEW SHEET 5).

b. PRODUCT SPECIFICATION SEE:
- -STANDARD CONFIGURATION (STD): PS-33472-000
- C8 - MID-VOLT CONFIGURATION : PS-33472-000
- -TRANSMISSION CONFIGURATION (TRNS):
  - CONTAINS SILICONE: TS-160038-0001
  - SILICONE FREE: TBD
- -UL V0 CONFIGURATION (UL V0): PS-160074-0001
  - CONTAINS: PRODUCT INTRODUCTION, PRODUCT SUMMARY, RATINGS (CURRENT, TEMPERATURE, SEALING, AND FLAMMABILITY), TERMINALS, WIRE DIAMETER RANGE, PRODUCT VALIDATION, AND PRODUCT DEVIATIONS.

c. PACKAGING SPECIFICATION PER MOLEX DRAWING: SEE PACKAGING CHART

d. PARTS MUST BE IN COMPLIANCE TO MOLEX CHEMICAL SUBSTANCES FOR PRODUCTS AND PACKAGING SPECIFICATION: QEHS-699000-301

e. DATA MUST BE SUBMITTED UNDER THE MOLEX PART NUMBER TO IMDS (COMPANY ID#13255)

2. DESIGN - MATERIALS:

a. FOR BILL OF MATERIALS SEE:
- -STANDARD CONFIGURATION SD-33472-0002
- -TRANSMISSION CONGURATION
  - CONTAINS SILICONE: SD-160038-0002
  - SILICONE FREE: SD-160092-0002
- -UL V0 CONFIGURATION SD-160074-0002
- C8 - MID-VOLT CONFIGURATION SD-300361-0002

b. TRANSMISSION CONNECTOR COMPONENTS MUST MEET THE MATERIAL REQUIREMENTS SPECIFIED IN TS-160038-0001 & TBD

3. DESIGN - GEOMETRY:

a. THE 3-D CAD DATA IS BASIC (WITHOUT TOLERANCE) AND MASTER FOR THIS PART WITH THE EXCEPTION OF UNDERLINED DIMENSIONS. DIMENSIONAL INFORMATION NOT SHOWN ON THIS DRAWING IS DEFINED BY THE DATA FILE AT ITS LATEST REVISION.

b. GEOMETRIC DIMENSIONS AND TOLERANCES PER ASME Y14.5M-2009

c. EDGES AND UNDIMENSIONED DETAILS PER ISO13715

d. CORNERS SHOWN AS SHARP TO BE R 0.2 MAX.

e. LETTERING SHALL BE 0.15 MAX RAISED IN 0.25 MAX RECESS PAD. THIS INCLUDES RECYCLING CODE, CAVITY ID, VENDOR IDENTIFICATION, AND CUSTOMER MATERIAL NUMBER.

f. VISUAL DEFECTS SHALL MEET COSMETIC STANDARD PS-45499-002 (Class B).

g. LASER MARKING:
1. PART NUMBER
2. DAY OF THE YEAR
3. SHIFT
4. YEAR

FOR ADDITIONAL INFORMATION SEE SECTION 5 UNDER PROCEDURES IN ES-34735-008.

h. 2X2 CLIP-SLOT DESIGN IS BASED ON USCAR/EWCAP 7mm CLIP SLOT EWCAP - 005 - 7
2X3 THRU 2X10 CLIP-SLOT DESIGN IS BASED ON USCAR/EWCAP 11mm CLIP SLOT EWCAP - 005 - 11

# PACKAGING

| | DESCRIPTION | DRAWING NO. |
|---|---|---|
| C9 | 2X2 | PK-31300-903 |
| | 2X3 | PK-31300-903 |
| | 2X4 | PK-31300-903 |
| | 2X6 | PK-31300-903 |
| | 2X8 | PK-31300-903 |
| | 2X10 | PK-31300-903 |

# MATING INTERFACE/CONNECTOR DRAWINGS

| | DESCRIPTION | INTERFACE DEFINITION | MOLEX INLINE |
|---|---|---|---|
| | STANDARD 2X2 | *150-S-004-2-Z02 | SD-33482-0001 |
| | UL V0 2X2 | *150-S-004-2-Z02 | SD-33482-0001 |
| C8 | MID-VOLT 2X2 | *150-S-004-2-Z02 | SD-33482-0001 |
| | STANDARD 2X3 | *150-S-006-2-Z02 | SD-33482-0001 |
| | TRANSMISSION 2X3 | *150-S-006-2-Z02 | N/A |
| C8 | MID-VOLT 2X3 | *150-S-006-2-Z02 | SD-33482-0001 |
| | STANDARD 2X4 | *150-S-008-2-Z02 | SD-33482-0001 |
| | UL V0 2X4 | *150-S-008-2-Z02 | SD-33482-0001 |
| | STANDARD 2X6 | *150-S-012-2-Z01 | SD-33482-0001 |
| | UL V0 2X6 | *150-S-012-2-Z01 | SD-33482-0001 |
| | TRANSMISSION 2X6 | *150-S-012-2-Z01 | N/A |
| | STANDARD 2X8 | *150-S-016-2-Z01 | SD-33482-0001 |
| | STANDARD 2X10 | SD-33472-0001 | SD-33482-0001 |
| | UL V0 2X10 | SD-33472-0001 | SD-33482-0001 |
| C8 | MID-VOLT 2X10 | SD-33472-0001 | SD-33482-0001 |

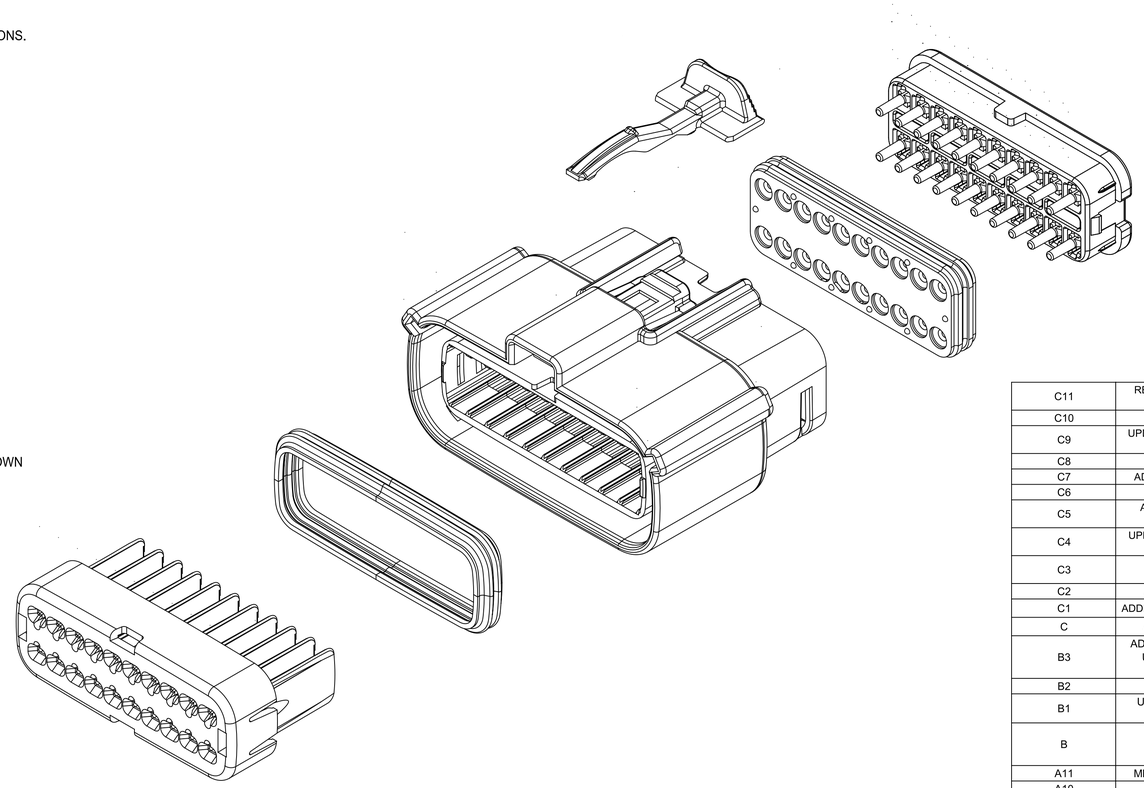

| REV | REV DESCRIPTION |
|---|---|
| C11 | REMOVED "NOT VALIDATED" TEXT FROM SHEET 11 |
| C10 | ADDED RELIEF SLOT - CANCELLED |
| C9 | UPDATE 2X2 PACKAGING DRAWING NO. ON SHEET 1 |
| C8 | ADDE MID-VOLT VERSION ASSY. |
| C7 | ADDED TRANSMISSION 2X6 IN APPENDIX |
| C6 | CORRECTED 2X6 UL V0 DIM "J" |
| C5 | ADDED UL V0 VERSION PRODUCT "PS" INFORMATION |
| C4 | UPDATED GENERAL TOLERANCES IN TITLE BLOCK |
| C3 | CORRECTED 2X2 DIM A AND D, CORRECTED 2X4 DIM D |
| C2 | ADDED MOLEX BACKSHELL DETAILS |
| C1 | ADDED 2X6-TRNS.-WITH/WITHOUT CLIPSLOT * |
| C | ADDED 2X10-STD.-WITH CLIPSLOT * |
| B3 | ADD ROW FOR 2X6 V0 ON SHEET 5DIM3# UPDATE TO 25.0 MAX FOR V0DIM11# UPDATE TO 33.85 MAX FOR V0 |
| B2 | ADD 2X6 UL V0 CONFIGURATIONS |
| B1 | UPDATE 2X6 W/O CLIPSLOT DIM G ON TABLE OF SHEET 5 |
| B | ADDED 2X2 - STD- WITH CLIPSLOT, 2X8 - STD- WITH CLIPSLOT AND NOTE h |
| A11 | MINOR GEOMETRY CHANGE FOR UL V0 |
| A10 | UPDATED 2X4 DRAWING NUMBER |
| A9 | UPDATED 2X10 PART NUMBERS |
| A8 | UPDATED 2X3 DRAWING NUMBER |
| A7 | UPDATED 2X10 INTERFACE |
| A6 | ADDED TRANSMISSION REFERENCES |
| A5 | ADD 2X10 INTERFACE SHEETS |
| A4 | ADD UL V0 CONFIGURATIONS |
| A3 | ADDED 2X3 STD AND TRANSMISSION |
| A2 | UPDATED 2X8 BLD DRAWINGS |
| A1 | FIXED TYPO IN NOTE 1a, UPDATED 2X6 MOLEX INLINE BLADE DRAWING |
| A | INITIAL RELEASE |

| INSPECTION NUMBER LOG |
|---|
| LAST NUMBER: 11<br>ADDED: 11<br>REMOVED: |

THIS DRAWING CONTAINS INFORMATION THAT IS PROPRIETARY TO MOLEX ELECTRONIC TECHNOLOGIES, LLC AND SHOULD NOT BE USED WITHOUT WRITTEN PERMISSION

FUNCTIONAL SYMBOLS: FA = 0, FC = 0, FP = 0

DIVISIONAL SYMBOLS

| DIMENSION UNITS | SCALE |
|---|---|
| MM | 1:1 |

GENERAL TOLERANCES (UNLESS SPECIFIED)

| | |
|---|---|
| ANGULAR TOL | ± 1° |
| 4 PLACES | ± |
| 3 PLACES | ± |
| 2 PLACES | ± 0.100 |
| 1 PLACE | ± 0.20 |
| 0 PLACES | ± |

DRAFT WHERE APPLICABLE MUST REMAIN WITHIN DIMENSIONS

CURRENT REV DESC: SEE REVISION TABLE

STATUS: Production
DRWN: Yuki Song 2025-07-16
CHK'D: Elvis Song 2025-07-17
APPR: Isong05 2025-07-17

THIRD ANGLE PROJECTION | DRAWING: A1-SIZE | SERIES: 33472

molex

MX150 RCPT
DUAL ROW SEALED ASSEMBLY

PRODUCT CUSTOMER DRAWING

| DOCUMENT NUMBER | DOC TYPE | DOC PART | REVISION |
|---|---|---|---|
| SD-33472-0001 | PSD | 001 | C11 |

| MATERIAL NUMBER | CUSTOMER | SHEET NUMBER |
|---|---|---|
| | GENERAL MARKET | 1 OF 11 |

FORMAT TC/signoff-A1
PRINTED BY
DATE 2025/08/01

# SHEET DESCRIPTION

CONFIGURATIONS

C8

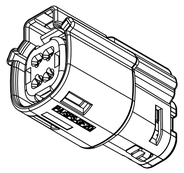

2X2 - STD.
2X2 - TRNS. - SILICONE FREE
2X2 - MID-VOLT

B

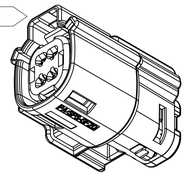

2X2 - STD. - WITH CLIPSLOT *

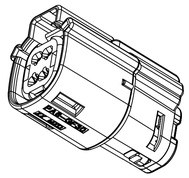

† 2X2 - UL V0

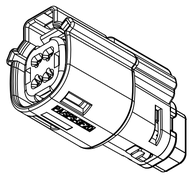

2X2 - STD. - LENGTHENED

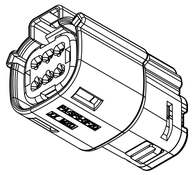

2X3 - STD.
2X3 - TRNS. - CONTAINS SILICONE

C8

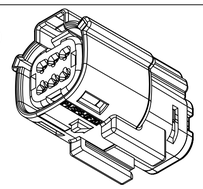

2X3 - STD. - WITH CLIPSLOT
2X3 - MID-VOLT. - WITH CLIPSLOT

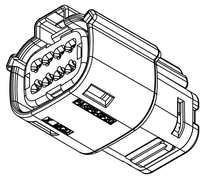

2X4 - STD.

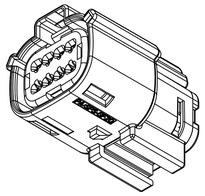

2X4 - STD. - WITH CLIPSLOT *

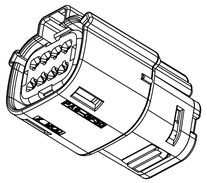

† 2X4 - UL V0

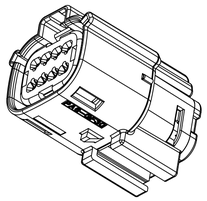

† 2X4 - UL V0-WITH CLIPSLOT*

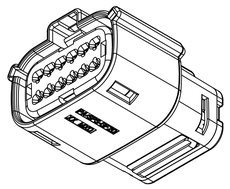

2X6 - STD.
C1 † 2X6 - TRNS.

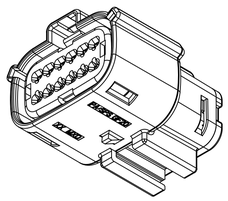

2X6 - STD. - WITH CLIPSLOT *
C1 † 2X6 - TRNS. - WITH CLIPSLOT *

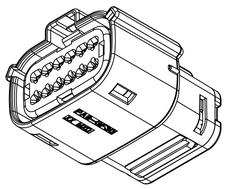

† 2X6 - UL V0

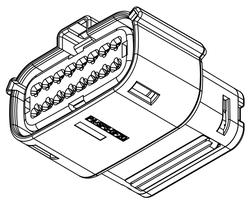

2X8 - STD.

B

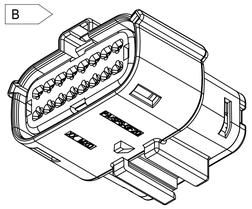

2X8 - STD. - WITH CLIPSLOT *

C8

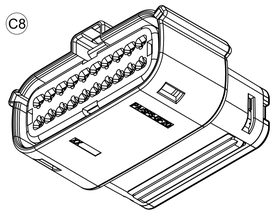

2X10 - STD.
2X10 - MID-VOLT.

C

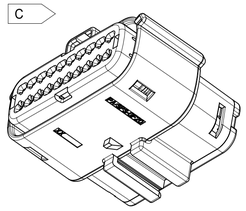

2X10 - STD. - WITH CLIPSLOT *

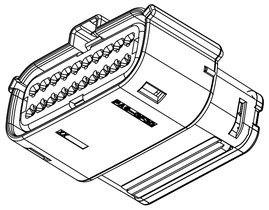

† 2X10 - UL V0

* WITH CLIPSLOT CONFIGURATION DOES NOT
MEET THE USCAR PACKAGING FRAME REQUIREMENTS
† MINOR GEOMETRY DIFFERENCE THAN STANDARD CONFIGURATION
SEE NOTES 1a & 2a-b FOR MORE INFORMATION

THIS DRAWING CONTAINS INFORMATION THAT IS PROPRIETARY TO MOLEX ELECTRONIC TECHNOLOGIES, LLC AND SHOULD NOT BE USED WITHOUT WRITTEN PERMISSION

| FUNCTIONAL SYMBOLS | DIMENSION UNITS | SCALE |
|---|---|---|
| FA = 0 | MM | 1:1 |
| FC = 0 | GENERAL TOLERANCES (UNLESS SPECIFIED) | |
| FP = 0 | ANGULAR TOL | ± 1° |
| DIVISIONAL SYMBOLS | 4 PLACES | ± |
| | 3 PLACES | ± |
| | 2 PLACES | ± 0.100 |
| | 1 PLACE | ± 0.20 |
| | 0 PLACES | ± |
| | DRAFT WHERE APPLICABLE MUST REMAIN WITHIN DIMENSIONS | |

CURRENT REV DESC: SEE REVISION TABLE

STATUS: Production
DRWN: Yuki Song 2025-07-16
CHK'D: Elvis Song 2025-07-17
APPR: Isong05 2025-07-17

THIRD ANGLE PROJECTION | DRAWING: A1-SIZE | SERIES: 33472

molex

MX150 RCPT
DUAL ROW SEALED ASSEMBLY

PRODUCT CUSTOMER DRAWING

| DOCUMENT NUMBER | DOC TYPE | DOC PART | REVISION |
|---|---|---|---|
| SD-33472-0001 | PSD | 001 | C11 |

| MATERIAL NUMBER | CUSTOMER | SHEET NUMBER |
|---|---|---|
| | GENERAL MARKET | 2 OF 11 |

FORMAT: TCLengineerA1
REVISION: D
DATE: 2022/08/01

# SHEET DESCRIPTION

KEY CONFIGURATIONS

## 2X2

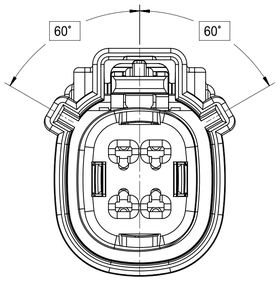


KEY A

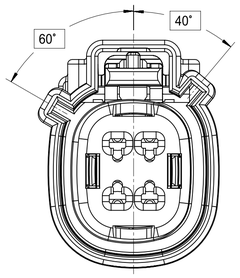


KEY B

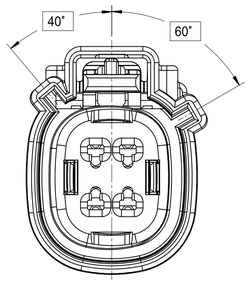


KEY C

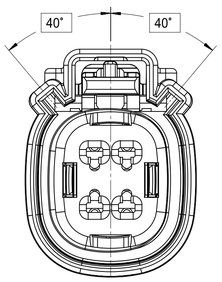


KEY D

## 2X3

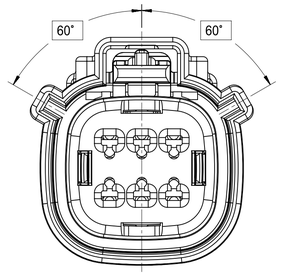


KEY A

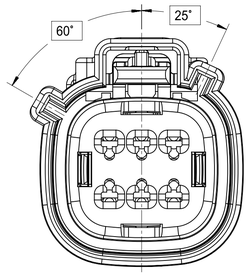


KEY B

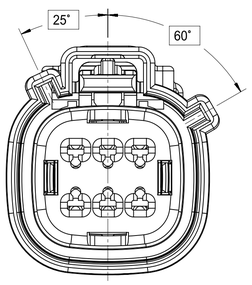


KEY C

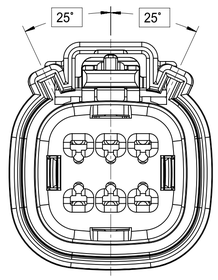


KEY D

## 2X4

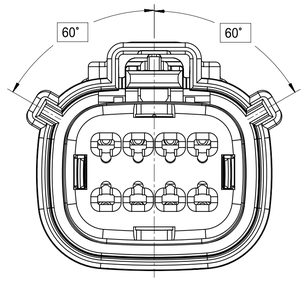


KEY A

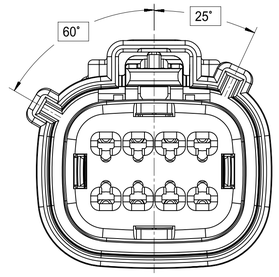


KEY B

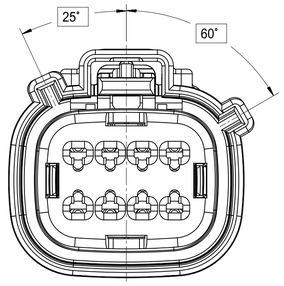


KEY C

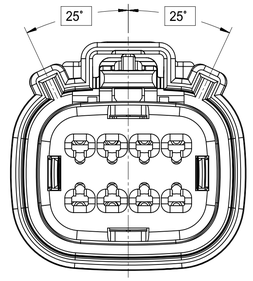


KEY D

| FUNCTIONAL SYMBOLS | | |
|---|---|---|
| FA = 0 | DIMENSION UNITS | SCALE |
| | MM | 1:1 |
| FC = 0 | GENERAL TOLERANCES (UNLESS SPECIFIED) | |
| | ANGULAR TOL | ± 1˚ |
| FP = 0 | 4 PLACES | ± |
| DIVISIONAL SYMBOLS | 3 PLACES | ± |
| | 2 PLACES | ± 0.100 |
| | 1 PLACE | ± 0.20 |
| | 0 PLACES | ± |
| | DRAFT WHERE APPLICABLE MUST REMAIN WITHIN DIMENSIONS | |

THIS DRAWING CONTAINS INFORMATION THAT IS PROPRIETARY TO MOLEX ELECTRONIC TECHNOLOGIES, LLC AND SHOULD NOT BE USED WITHOUT WRITTEN PERMISSION

CURRENT REV DESC: SEE REVISION TABLE

STATUS: Production

| | | |
|---|---|---|
| DRWN: | Yuki Song | 2025-07-16 |
| CHK'D: | Elvis Song | 2025-07-17 |
| APPR: | Isong05 | 2025-07-17 |

THIRD ANGLE PROJECTION | DRAWING: A1-SIZE | SERIES: 33472

molex

MX150 RCPT
DUAL ROW SEALED ASSEMBLY

PRODUCT CUSTOMER DRAWING

| DOCUMENT NUMBER | DOC TYPE | DOC PART | REVISION |
|---|---|---|---|
| SD-33472-0001 | PSD | 001 | C11 |

| MATERIAL NUMBER | CUSTOMER | SHEET NUMBER |
|---|---|---|
| | GENERAL MARKET | 3 OF 11 |

FORMAT: TC1Engineer.F
REVISION: B
DATE: 2022/06/01

# SHEET DESCRIPTION

KEY CONFIGURATIONS CONT.

## 2X6

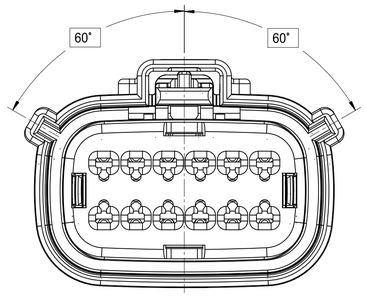


KEY A

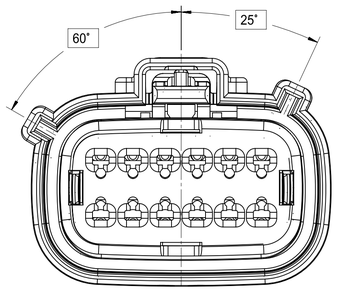


KEY B

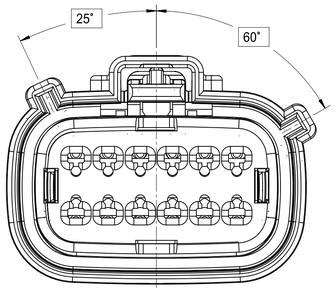


KEY C

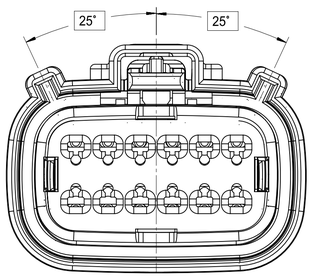


KEY D

## 2X8

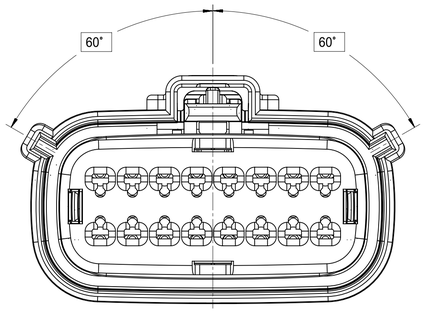


KEY A

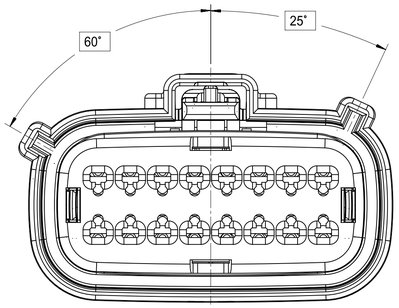


KEY B

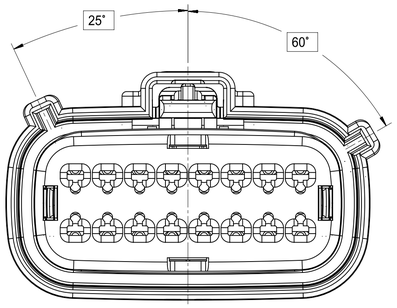


KEY C

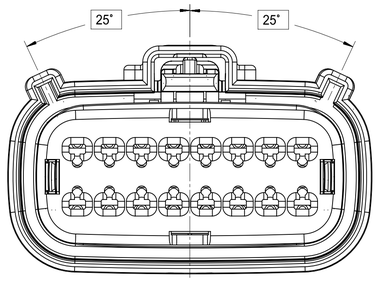


KEY D

## 2X10

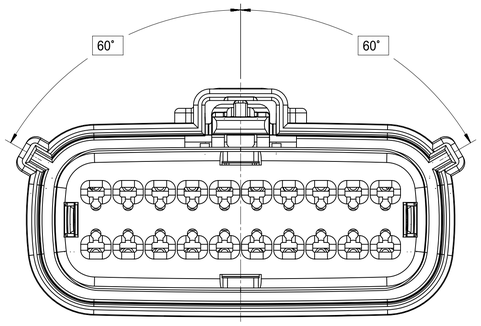


KEY A

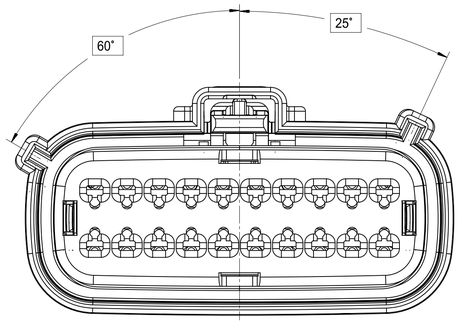


KEY B

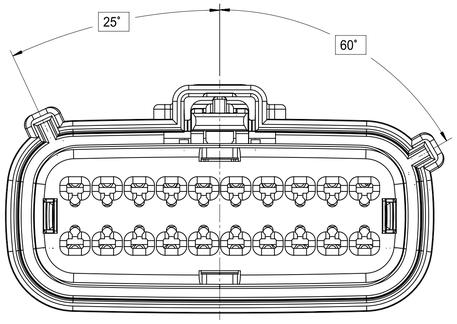


KEY C

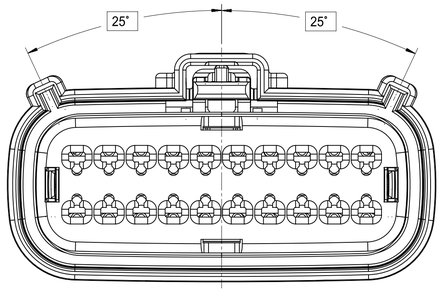


KEY D

THIS DRAWING CONTAINS INFORMATION THAT IS PROPRIETARY TO MOLEX ELECTRONIC TECHNOLOGIES, LLC AND SHOULD NOT BE USED WITHOUT WRITTEN PERMISSION

| FUNCTIONAL SYMBOLS | DIMENSION UNITS | SCALE |
|---|---|---|
| FA = 0 | MM | 1:1 |
| FC = 0 | GENERAL TOLERANCES (UNLESS SPECIFIED) | |
| FP = 0 | ANGULAR TOL | ± 1˚ |
| DIVISIONAL SYMBOLS | 4 PLACES | ± |
| | 3 PLACES | ± |
| | 2 PLACES | ± 0.100 |
| | 1 PLACE | ± 0.20 |
| | 0 PLACES | ± |

DRAFT WHERE APPLICABLE MUST REMAIN WITHIN DIMENSIONS

CURRENT REV DESC: SEE REVISION TABLE

STATUS: Production

| | | |
|---|---|---|
| DRWN: | Yuki Song | 2025-07-16 |
| CHK'D: | Elvis Song | 2025-07-17 |
| APPR: | Isong05 | 2025-07-17 |

THIRD ANGLE PROJECTION

| DRAWING | SERIES |
|---|---|
| A1-SIZE | 33472 |

molex

MX150 RCPT
DUAL ROW SEALED ASSEMBLY

PRODUCT CUSTOMER DRAWING

| DOCUMENT NUMBER | DOC TYPE | DOC PART | REVISION |
|---|---|---|---|
| SD-33472-0001 | PSD | 001 | C11 |

| MATERIAL NUMBER | CUSTOMER | SHEET NUMBER |
|---|---|---|
| | GENERAL MARKET | 4 OF 11 |

FORMAT: 01-Engineering
REVISION: B
DATE: 2022/08/01

# SHEET DESCRIPTION

RECEPTACLE CONNECTOR ASSEMBLY

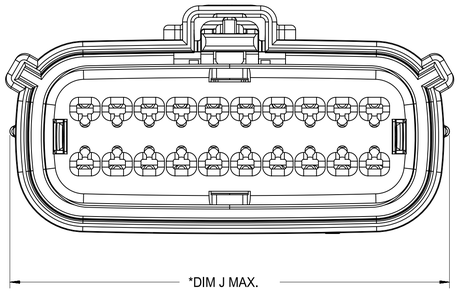


* APPLIES TO UL-V0 CONFIGURATIONS ONLY

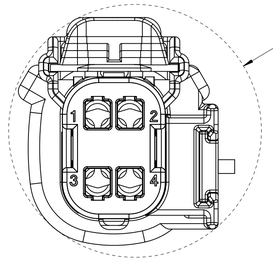


B APPLIES TO 2X2 - STD. - WITH CLIPSLOT ONLY

## CHARTED DIMENSIONS

| DESCRIPTION | DIMENSIONS | | | | | | | |
|---|---|---|---|---|---|---|---|---|
| | A | B | C | D | E | F | G | J |
| 2X2 W/O CLIPSLOT | 18.75 | 1.75 | 25.45 | 24.90 | 37.65 | N/A | 2.75±0.50 | |
| 2X2 W/ CLIPSLOT | 18.75 | 1.75 | 27.65 | 24.90 | 37.65 | N/A | 2.75±0.50 | |
| 2X2 LENGTHENED | 18.75 | 1.75 | 25.45 | 24.90 | 42.25 | N/A | 2.75±0.50 | 20.04 |
| 2X3 W/ CLIPSLOT | 22.25 | 3.5 | 30.50 | N/A | 37.65 | 27.96 | 4.0±0.4 | |
| 2X3 W/O CLIPSLOT | 22.25 | 3.5 | 26.24 | 24.90 | 37.65 | N/A | 4.0±0.4 | |
| 2X4 W/ CLIPSLOT | 25.75 | 1.75 | 31.50 | N/A | 37.65 | 28.00 | 2.75±0.50 | 27.04 |
| 2X4 W/O CLIPSLOT | 25.75 | 1.75 | 29.19 | 24.90 | 37.65 | N/A | 2.75±0.50 | 27.04 |
| 2X6 W/ CLIPSLOT | 32.75 | 1.75 | 35.58 | N/A | 37.65 | 27.76 | 2.75±0.50 | |
| C6 2X6 W/O CLIPSLOT | 32.75 | 1.75 | 35.58 | 24.90 | 37.65 | N/A | 2.75±0.50 | 34.04 |
| 2X8 W/O CLIPSLOT | 39.80 | 1.75 | 42.25 | 24.90 | 37.65 | N/A | 4.0±0.4 | |
| 2X8 W/ CLIPSLOT | 39.80 | 1.75 | 42.25 | N/A | 37.65 | 27.80 | 4.0±0.4 | |
| 2X10 W/O CLIPSLOT | 46.75 | 1.75 | 49.95 | 24.90 | 37.65 | N/A | 2.75±0.50 | 48.04 |
| 2X10 W/ CLIPSLOT | 46.75 | 1.75 | 49.95 | N/A | 37.65 | 27.80 | 2.75±0.50 | |

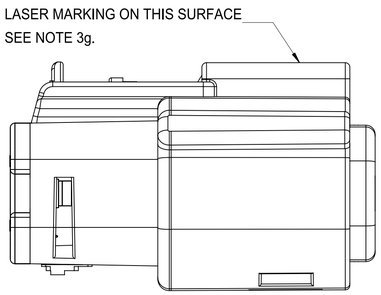


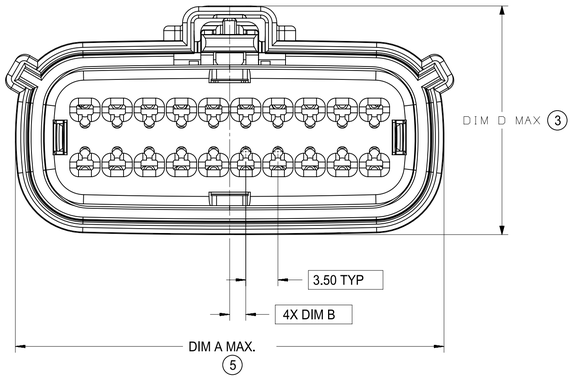


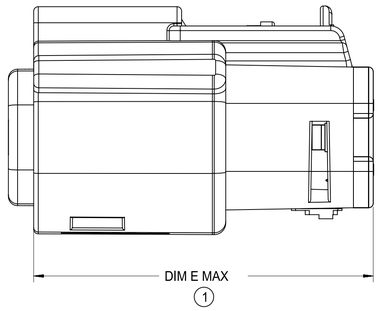


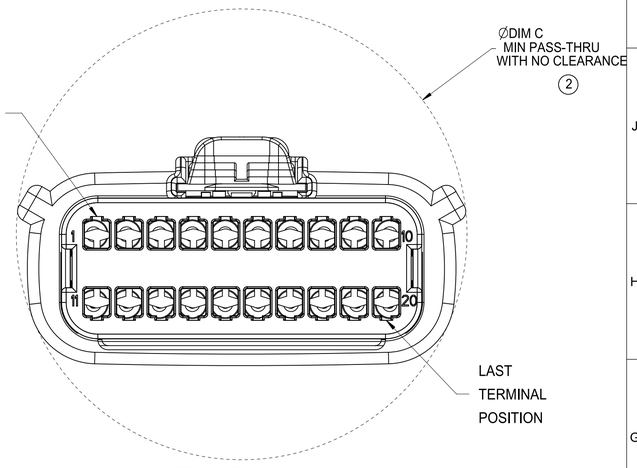


REAR VIEW
(WIRE HARNESS SIDE)

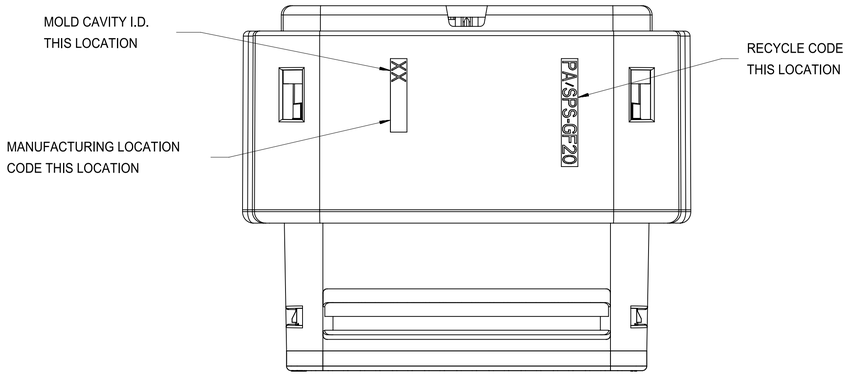


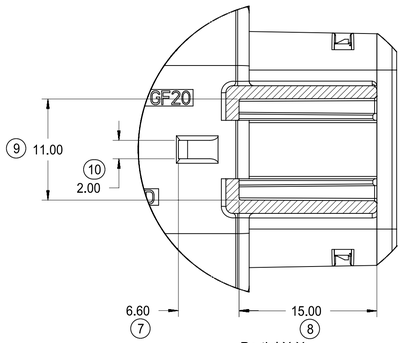


Partial X-X
SCALE 3:1

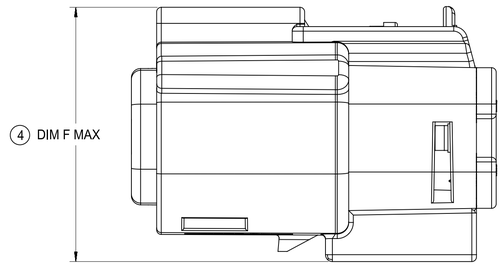


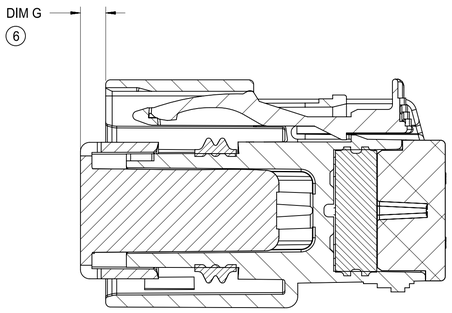


PRIMARY LOCK REINFORCEMENT (PLR) SHOWN
IN PRE-STAGED POSITION

SECTION Y-Y

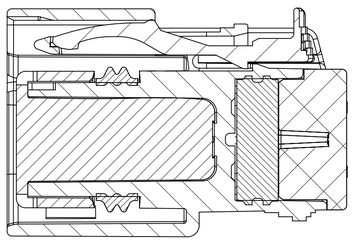

PRIMARY LOCK REINFORCEMENT (PLR) SHOWN
IN FINAL-LOCK POSITION

SECTION Z-Z

THIS DRAWING CONTAINS INFORMATION THAT IS PROPRIETARY TO MOLEX ELECTRONIC TECHNOLOGIES, LLC AND SHOULD NOT BE USED WITHOUT WRITTEN PERMISSION

FUNCTIONAL SYMBOLS
E A = 0
E C = 0
E D = 0

DIVISIONAL SYMBOLS

| DIMENSION UNITS | SCALE |
|---|---|
| MM | 1:1 |

GENERAL TOLERANCES (UNLESS SPECIFIED)

| | |
|---|---|
| ANGULAR TOL | ± 1° |
| 4 PLACES | ± |
| 3 PLACES | ± |
| 2 PLACES | ± 0.100 |
| 1 PLACE | ± 0.20 |
| 0 PLACES | ± |

DRAFT WHERE APPLICABLE MUST REMAIN WITHIN DIMENSIONS

CURRENT REV DESC: SEE REVISION TABLE

STATUS: Production
DRWN: Yuki Song 2025-07-16
CHK'D: Elvis Song 2025-07-17
APPR: Isong05 2025-07-17

THIRD ANGLE PROJECTION

| DRAWING | SERIES |
|---|---|
| A1-SIZE | 33472 |

molex

MX150 RCPT
DUAL ROW SEALED ASSEMBLY

PRODUCT CUSTOMER DRAWING

| DOCUMENT NUMBER | DOC TYPE | DOC PART | REVISION |
|---|---|---|---|
| SD-33472-0001 | PSD | 001 | C11 |

| MATERIAL NUMBER | CUSTOMER | SHEET NUMBER |
|---|---|---|
| | GENERAL MARKET | 5 OF 11 |

| SHEET DESCRIPTION |
|---|
| BACKSHELL NOTES |

BACKSHELL NOTES: VALID UNLESS OTHERWISE SPECIFIED

1. GENERAL:

a. APPLICATION SPECIFICATION SEE: AS-34951-001

-DESIGNED TO MATE WITH RECEPTACLE SEALED ASSEMBLY SPECIFIED IN MOLEX DRAWING SD-33472-0001.

-SYSTEM TO BE USED WITH WIRE WITHIN DIAMETER RANGE OF 1.2mm TO 2.69mm.

-COMPONENTS ARE OPTIONAL AND MUST BE PURCHASED SEPERATELY.

-DESIGN IS OWNED BY SCHLEMMER FOR SCHLEMMER BACKSHELL.

-DESIGN IS OWNED BY MOLEX FOR MOLEX BACKSHELL.

-90˚ ADAPTOR DESIGN IS OWNED BY MOLEX.

-FOR ADDITIONAL INFORMATION SEE THE BACKSHELL COMPONENT DRAWING SD-34951-0001.

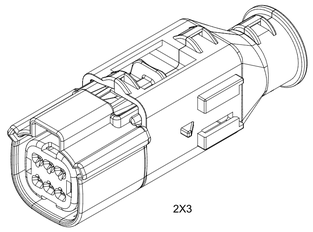

2X3

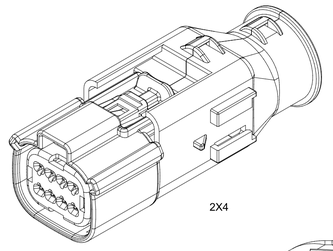

2X4

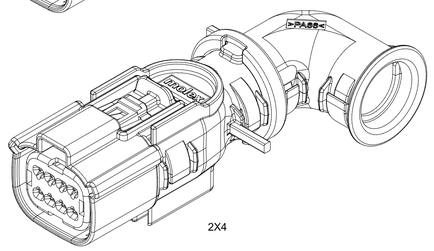

2X4

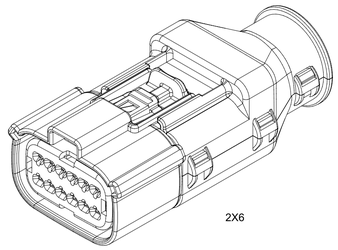

2X6

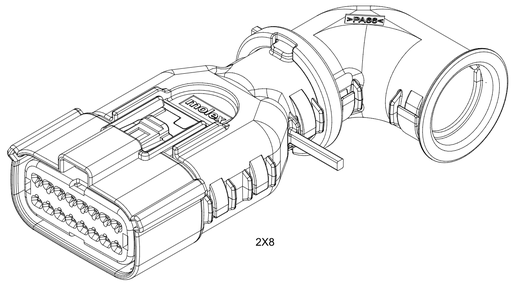

2X8

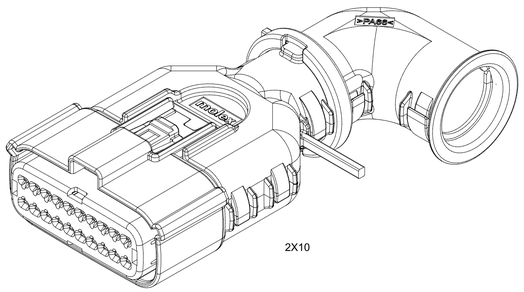

2X10

BACKSHELL CUSTOMER
MODEL NUMBER LEGEND

34951-XXXX

CUSTOMER MODEL COMPONENTS
- 0 - SCHLEMMER BACKSHELL ONLY
- 1 - SCHLEMMER BACKSHELL & MX150 HOUSING KEY A ASSEMBLY
- 2 - SCHLEMMER BACKSHELL & MX150 HOUSING KEY B ASSEMBLY
- 3 - SCHLEMMER BACKSHELL & MX150 HOUSING KEY C ASSEMBLY
- 4 - SCHLEMMER BACKSHELL & MX150 HOUSING KEY D ASSEMBLY
- 5 - MOLEX BACKSHELL ONLY
- 6 - MOLEX BACKSHELL & MX150 HOUSING KEY A ASSEMBLY
- 7 - MOLEX BACKSHELL & MX150 HOUSING KEY B ASSEMBLY
- 8 - MOLEX BACKSHELL & MX150 HOUSING KEY C ASSEMBLY
- 9 - MOLEX BACKSHELL & MX150 HOUSING KEY D ASSEMBLY

BACKSHELL FEATURES
- 1 - WITH RIBS
- 2 - WITHOUT RIBS
- 3 - 90˚ ADAPTOR

MX150 CIRCUIT SIZE 04, 06, 08, 12, 16, 20

90˚ ADAPTOR

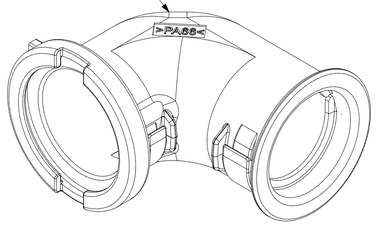

BACKSHELL (BKS)

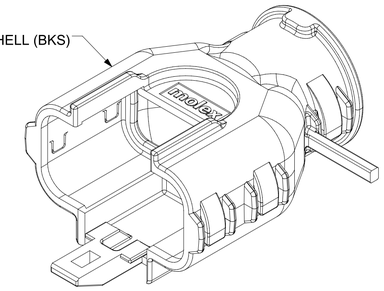

RECEPTACLE SEALED ASSEMBLY

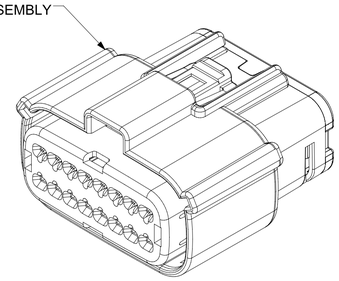

SCALE 2:1

| FUNCTIONAL SYMBOLS | THIS DRAWING CONTAINS INFORMATION THAT IS PROPRIETARY TO MOLEX ELECTRONIC TECHNOLOGIES, LLC AND SHOULD NOT BE USED WITHOUT WRITTEN PERMISSION | | | |
|---|---|---|---|---|
| = 0 | DIMENSION UNITS: MM | SCALE: 1.5:1 | CURRENT REV DESC: SEE REVISION TABLE | molex |
| = 0 | GENERAL TOLERANCES (UNLESS SPECIFIED) | | | MX150 RCPT DUAL ROW SEALED ASSEMBLY |
| = 0 | ANGULAR TOL | ± 1˚ | | |
| | 4 PLACES | ± | | |
| DIVISIONAL SYMBOLS | 3 PLACES | ± | STATUS: Production | PRODUCT CUSTOMER DRAWING |
| | 2 PLACES | ± 0.100 | DRWN: Yuki Song 2025-07-16 | DOCUMENT NUMBER: SD-33472-0001 / DOC TYPE: PSD / DOC PART: 001 / REVISION: C11 |
| | 1 PLACE | ± 0.20 | CHK'D: Elvis Song 2025-07-17 | |
| | 0 PLACES | ± | APPR: Isong05 2025-07-17 | |
| | DRAFT WHERE APPLICABLE MUST REMAIN WITHIN DIMENSIONS | THIRD ANGLE PROJECTION | DRAWING: A1-SIZE / SERIES: 33472 | MATERIAL NUMBER / CUSTOMER: GENERAL MARKET / SHEET NUMBER: 6 OF 11 |

| SHEET DESCRIPTION |
|---|
| SCHLEMMER BACKSHELL |

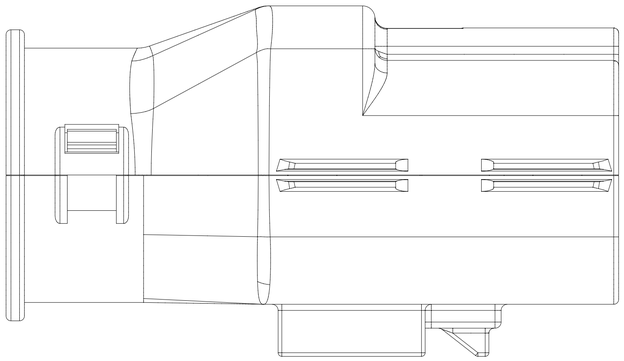

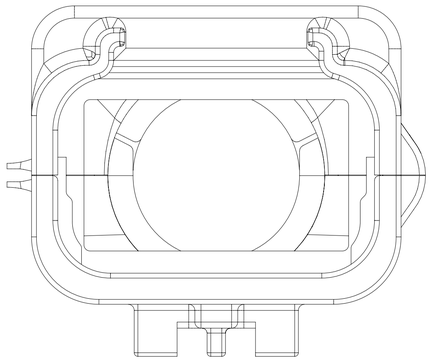

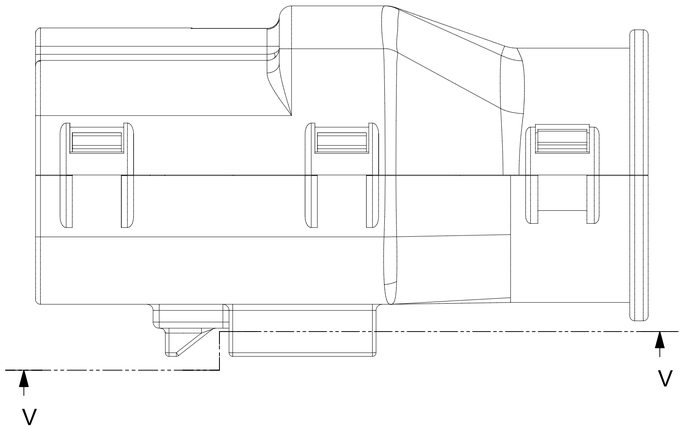


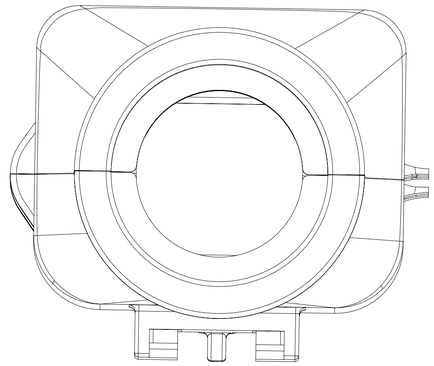

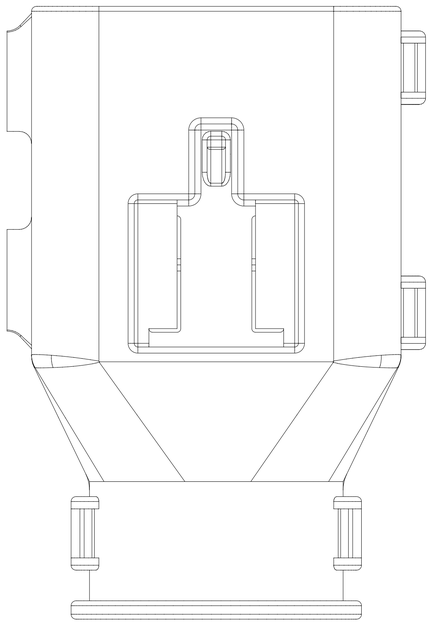

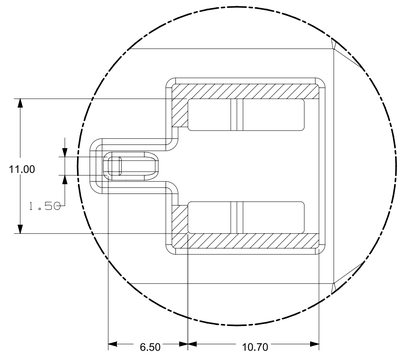


Partial V-V
SCALE 4:1

| FUNCTIONAL SYMBOLS | | | |
|---|---|---|---|
| F/A = 0 | DIMENSION UNITS | SCALE | |
| F/C = 0 | MM | 4:1 | |
| F/P = 0 | GENERAL TOLERANCES (UNLESS SPECIFIED) | | |
| | ANGULAR TOL | ± | 1° |
| DIVISIONAL SYMBOLS | 4 PLACES | ± | |
| | 3 PLACES | ± | |
| | 2 PLACES | ± | 0.100 |
| | 1 PLACE | ± | 0.20 |
| | 0 PLACES | ± | |
| | DRAFT WHERE APPLICABLE MUST REMAIN WITHIN DIMENSIONS | | |

THIS DRAWING CONTAINS INFORMATION THAT IS PROPRIETARY TO MOLEX ELECTRONIC TECHNOLOGIES, LLC AND SHOULD NOT BE USED WITHOUT WRITTEN PERMISSION

CURRENT REV DESC: SEE REVISION TABLE

| | | |
|---|---|---|
| STATUS: | Production | |
| DRWN: | Yuki Song | 2025-07-16 |
| CHK'D: | Elvis Song | 2025-07-17 |
| APPR: | Isong05 | 2025-07-17 |

| THIRD ANGLE PROJECTION | DRAWING | SERIES |
|---|---|---|
| | A1-SIZE | 33472 |

molex

MX150 RCPT
DUAL ROW SEALED ASSEMBLY

PRODUCT CUSTOMER DRAWING

| DOCUMENT NUMBER | DOC TYPE | DOC PART | REVISION |
|---|---|---|---|
| SD-33472-0001 | PSD | 001 | C11 |

| MATERIAL NUMBER | CUSTOMER | SHEET NUMBER |
|---|---|---|
| | GENERAL MARKET | 7 OF 11 |

FORMAT TEMPLATE
REVISION B
DATE 2022/08/01

| SHEET DESCRIPTION |
|---|
| MOLEX BACKSHELL |

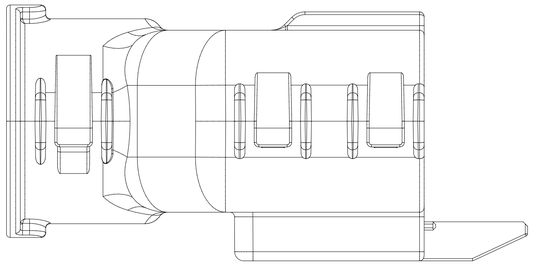

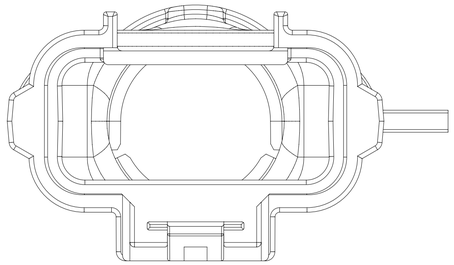

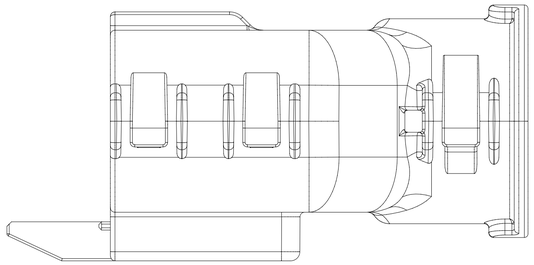

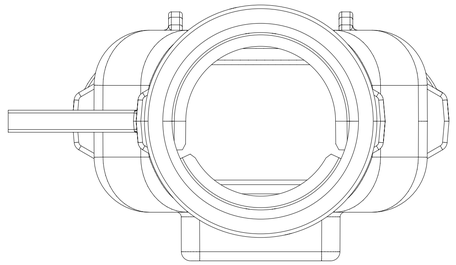

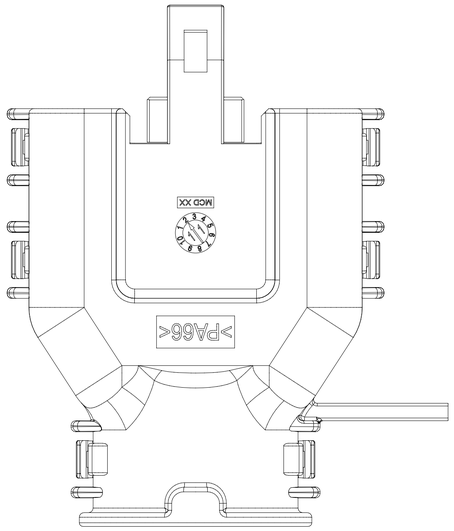


THIS DRAWING CONTAINS INFORMATION THAT IS PROPRIETARY TO MOLEX ELECTRONIC TECHNOLOGIES, LLC AND SHOULD NOT BE USED WITHOUT WRITTEN PERMISSION

| FUNCTIONAL SYMBOLS | DIMENSION UNITS | SCALE |
|---|---|---|
| FA = 0 | MM | 3:1 |
| FC = 0 | GENERAL TOLERANCES (UNLESS SPECIFIED) | |
| FP = 0 | ANGULAR TOL | ± 1° |
| DIVISIONAL SYMBOLS | 4 PLACES | ± |
| | 3 PLACES | ± |
| | 2 PLACES | ± 0.100 |
| | 1 PLACE | ± 0.20 |
| | 0 PLACES | ± |
| | DRAFT WHERE APPLICABLE MUST REMAIN WITHIN DIMENSIONS | |

CURRENT REV DESC: SEE REVISION TABLE

STATUS: Production
DRWN: Yuki Song 2025-07-16
CHK'D: Elvis Song 2025-07-17
APPR: Isong05 2025-07-17

THIRD ANGLE PROJECTION | DRAWING: A1-SIZE | SERIES: 33472

molex

MX150 RCPT
DUAL ROW SEALED ASSEMBLY

PRODUCT CUSTOMER DRAWING

| DOCUMENT NUMBER | DOC TYPE | DOC PART | REVISION |
|---|---|---|---|
| SD-33472-0001 | PSD | 001 | C11 |

| MATERIAL NUMBER | CUSTOMER | SHEET NUMBER |
|---|---|---|
| | GENERAL MARKET | 8 OF 11 |

FORMAT: 11-Engineer-A
REVISION: B
DATE: 2022/04/01

| SHEET DESCRIPTION |
|---|
| SCHLEMMER BACKSHELL CONFIGURATIONS |

| CHARTED DIMENSIONS | |
|---|---|
| DESCRIPTION | DIMENSIONS |
| | H |
| 2X3 W/ CLIPSLOT | N/A |
| 2X3 W/O CLIPSLOT | 28.50 |
| 2X4 W/ CLIPSLOT | N/A |
| 2X4 W/O CLIPSLOT | 30.75 |
| 2X6 W/ CLIPSLOT | N/A |
| 2X6 W/O CLIPSLOT | 35.83 |

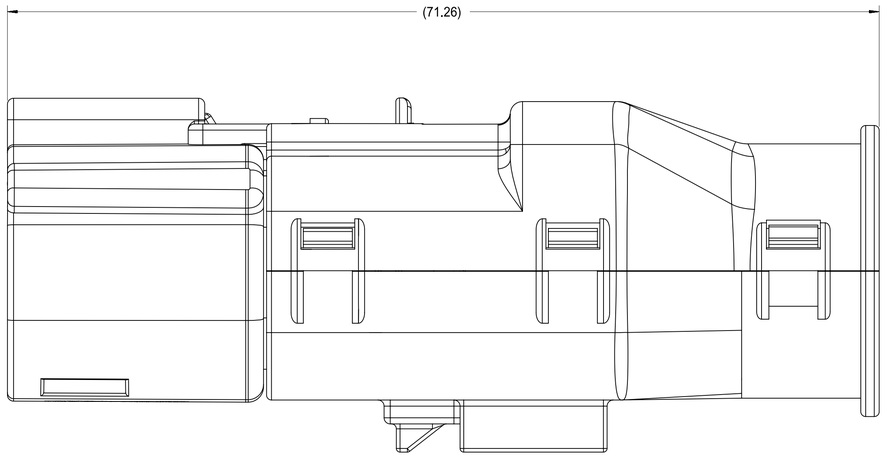


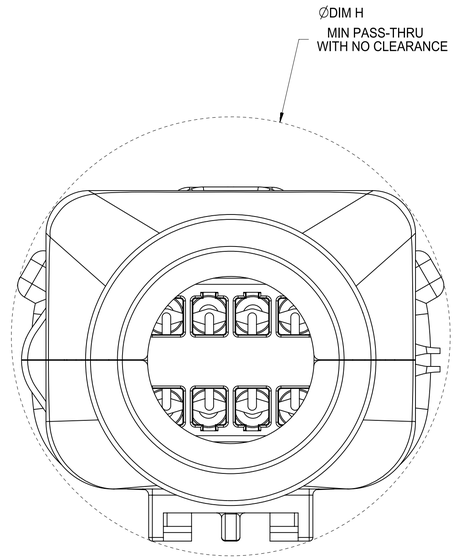


RECEPTACLE SEALED ASSEMBLY WITH RECEPTACLE BACKSHELL

THIS DRAWING CONTAINS INFORMATION THAT IS PROPRIETARY TO MOLEX ELECTRONIC TECHNOLOGIES, LLC AND SHOULD NOT BE USED WITHOUT WRITTEN PERMISSION

| FUNCTIONAL SYMBOLS | DIMENSION UNITS | SCALE |
|---|---|---|
| FA = 0 | MM | 4:1 |
| FC = 0 | GENERAL TOLERANCES (UNLESS SPECIFIED) | |
| FP = 0 | ANGULAR TOL | ± 1° |
| DIVISIONAL SYMBOLS | 4 PLACES | ± |
| | 3 PLACES | ± |
| | 2 PLACES | ± 0.100 |
| | 1 PLACE | ± 0.20 |
| | 0 PLACES | ± |
| | DRAFT WHERE APPLICABLE MUST REMAIN WITHIN DIMENSIONS | |

CURRENT REV DESC: SEE REVISION TABLE

STATUS: Production
DRWN: Yuki Song 2025-07-16
CHK'D: Elvis Song 2025-07-17
APPR: Isong05 2025-07-17

THIRD ANGLE PROJECTION | DRAWING: A1-SIZE | SERIES: 33472

molex

MX150 RCPT
DUAL ROW SEALED ASSEMBLY

PRODUCT CUSTOMER DRAWING

| DOCUMENT NUMBER | DOC TYPE | DOC PART | REVISION |
|---|---|---|---|
| SD-33472-0001 | PSD | 001 | C11 |

MATERIAL NUMBER | CUSTOMER: GENERAL MARKET | SHEET NUMBER: 9 OF 11

FORMAT: TC-large-pdf-A1
REVISION: B
DATE: 2022/08/01

| SHEET DESCRIPTION |
|---|
| MOLEX BACKSHELL CONFIGURATIONS |

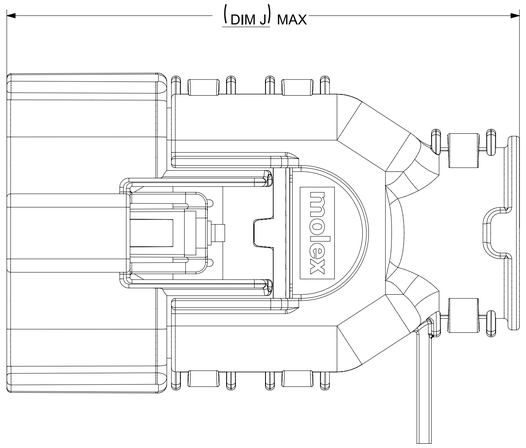


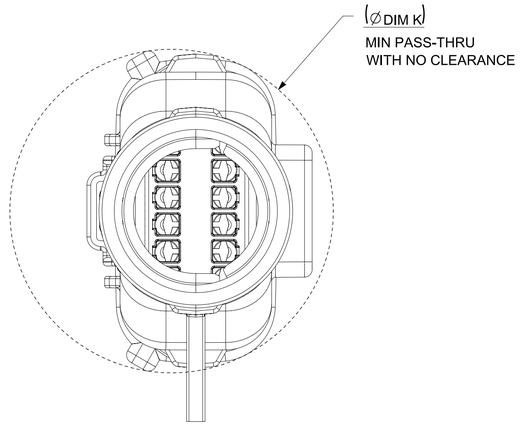


RECEPTACLE SEALED ASSEMBLY WITH RECEPTACLE BACKSHELL

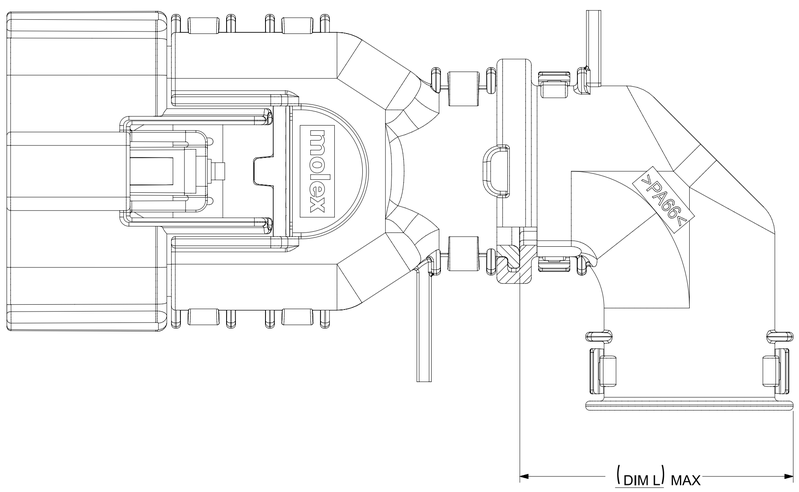


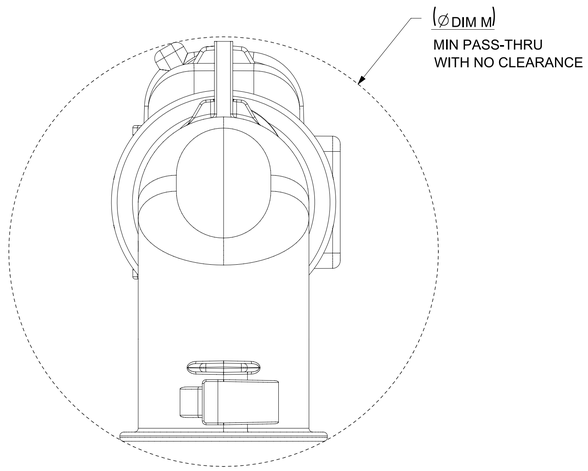


ADD THE VALUE OF 'L' TO THE TOTAL DIMENSION
WHENEVER ADAPTOR IS USED

CHARTED DIMENSIONS

| | DESCRIPTION | DIMENSIONS | | | |
|---|---|---|---|---|---|
| | | J | K | L | M |
| | 2X2 W/O CLIPSLOT | TBD | TBD | TBD | TBD |
| B | 2X2 W/ CLIP SLOT | TBD | TBD | TBD | TBD |
| | 2X2 LENGTHENED | TBD | TBD | TBD | TBD |
| | 2X4 W/ CLIPSLOT | 58.39 | 32.85 | 32.10 | 44.26 |
| | 2X4 W/O CLIPSLOT | N/A | N/A | N/A | N/A |
| | 2X8 W/ CLIPSLOT | 67.19 | 42.65 | 36.10 | 56.49 |
| B | 2X8 W/O CLIPSLOT | N/A | N/A | N/A | N/A |
| | 2X10 W/ CLIPSLOT | 67.19 | 42.65 | 36.10 | 56.49 |
| C | 2X10 W/O CLIPSLOT | N/A | N/A | N/A | N/A |

THIS DRAWING CONTAINS INFORMATION THAT IS PROPRIETARY TO MOLEX ELECTRONIC TECHNOLOGIES, LLC AND SHOULD NOT BE USED WITHOUT WRITTEN PERMISSION

FUNCTIONAL SYMBOLS
FA = 0
FC = 0
FP = 0

DIVISIONAL SYMBOLS

| DIMENSION UNITS | SCALE |
|---|---|
| MM | 2.5:1 |

GENERAL TOLERANCES (UNLESS SPECIFIED)

| | |
|---|---|
| ANGULAR TOL | ± 1° |
| 4 PLACES | ± |
| 3 PLACES | ± |
| 2 PLACES | ± 0.100 |
| 1 PLACE | ± 0.20 |
| 0 PLACES | ± |

DRAFT WHERE APPLICABLE MUST REMAIN WITHIN DIMENSIONS

CURRENT REV DESC: SEE REVISION TABLE

STATUS: Production
DRWN: Yuki Song 2025-07-16
CHK'D: Elvis Song 2025-07-17
APPR: Isong05 2025-07-17

THIRD ANGLE PROJECTION

| DRAWING | SERIES |
|---|---|
| A1-SIZE | 33472 |

molex

MX150 RCPT
DUAL ROW SEALED ASSEMBLY

PRODUCT CUSTOMER DRAWING

| DOCUMENT NUMBER | DOC TYPE | DOC PART | REVISION |
|---|---|---|---|
| SD-33472-0001 | PSD | 001 | C11 |

| MATERIAL NUMBER | CUSTOMER | SHEET NUMBER |
|---|---|---|
| | GENERAL MARKET | 10 OF 11 |

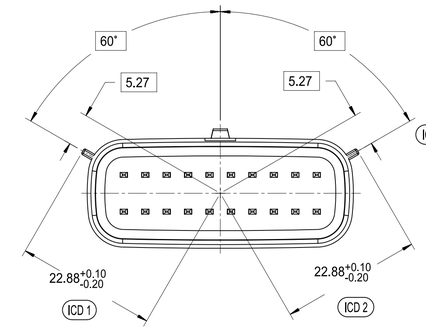


KEYING OPTION A
SCALE 4:1

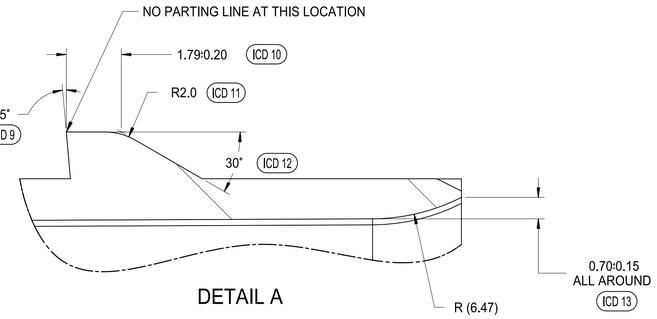


DETAIL A
SCALE 10:1

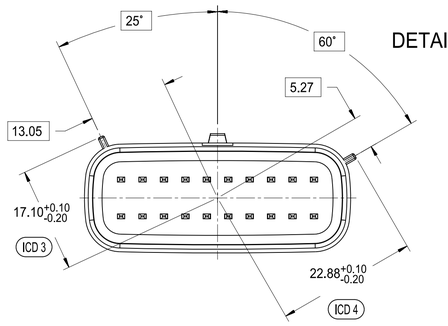


KEYING OPTION B
SCALE 4:1

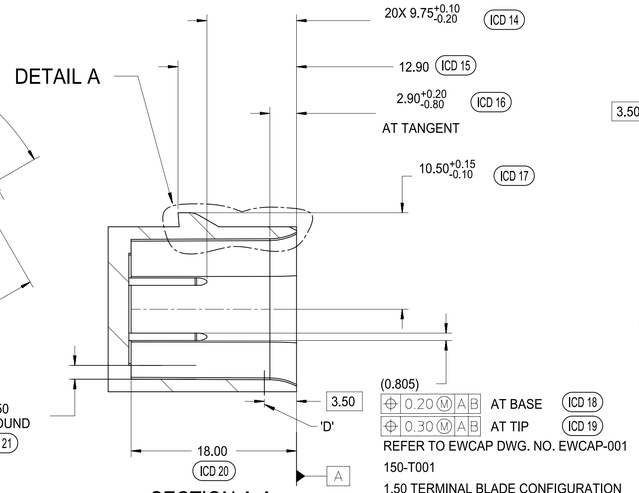


0.20 M A B AT BASE ICD 18
0.30 M A B AT TIP ICD 19
REFER TO EWCAP DWG. NO. EWCAP-001
150-T001
1.50 TERMINAL BLADE CONFIGURATION

SECTION A-A

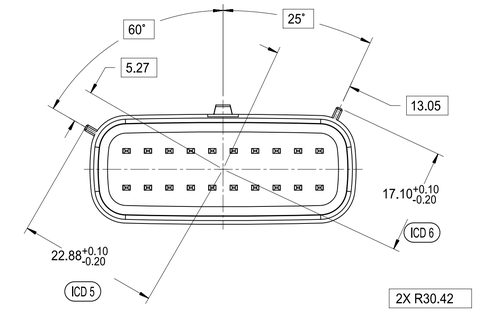


KEYING OPTION C
SCALE 4:1

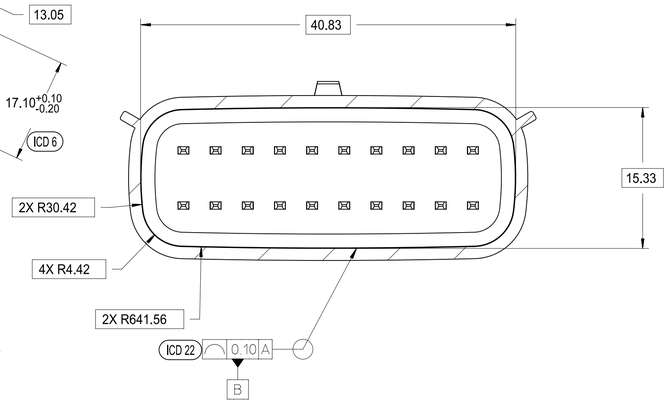


SECTION C-C

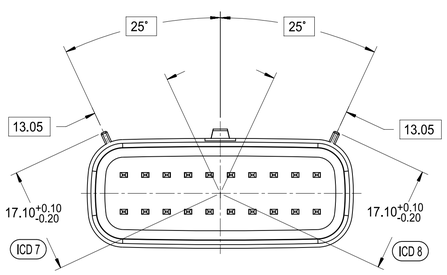


KEYING OPTION D
SCALE 4:1

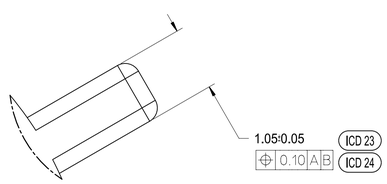


DETAIL C
SCALE 20:1
APPLIES 2X
SEE KEYING OPTION VIEWS
FOR POSITIONS

IF HEADER IS RECESSED INTO A POCKET, THESE DIMENSIONS REPRESENT
THE MINIMUM CLEARANCE REQUIRED FOR THE MATING CONNECTOR SHROUD

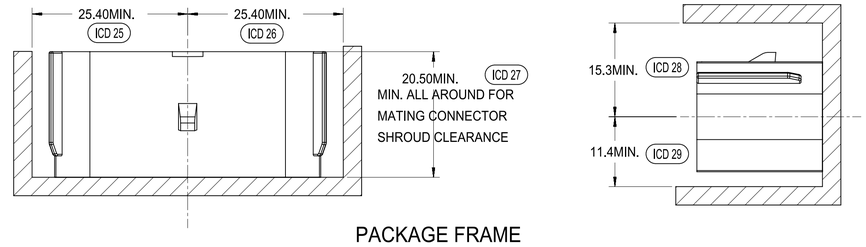


PACKAGE FRAME

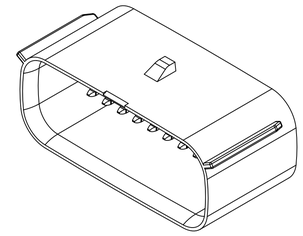

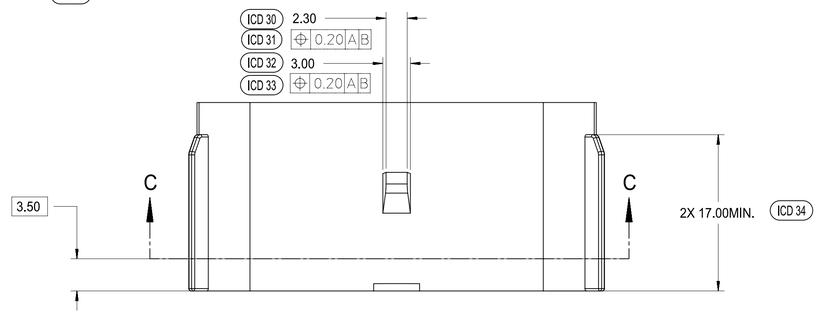


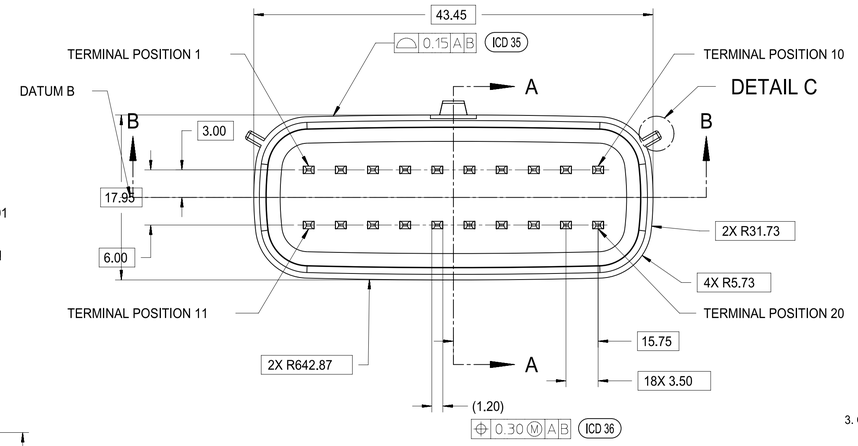


REFER TO EWCAP DWG. NO. EWCAP-001
150-T001
1.50 TERMINAL BLADE CONFIGURATION

SURFACE MUST BE FREE
OF SURFACE DEFECTS AND
PARTING LINES FOR
SEALING ALL AROUND

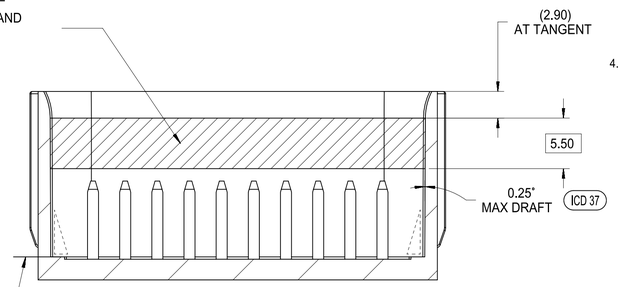


CONSTRUCTION BELOW THIS SURFACE IS
NOT CONTROLLED BY EWCAP. NO PLASTIC
FEATURES MAY EXTEND ABOVE THIS SURFACE.

SECTION B-B

MATING INTERFACE NOTES: VALID UNLESS OTHERWISE SPECIFIED

1. GENERAL:
   a. DESIGNED TO MATE WITH MOLEX CONNECTOR 33472-2XXX & 160008-0XXX & 160074-0XXX
      A FULL SHROUD ON THE MATING CONNECTOR IS REQUIRED TO INSURE THAT THE CONNECTOR-HEADER POLARIZATION FEATURES (OPTIONS A THRU D) WILL FUNCTION. THE FULL SHROUD ALSO PREVENTS SCOOP DAMAGE TO THE HEADER PINS. REFER TO 'SAE/USCAR-12 CONNECTOR DESIGN GUIDE LINES' FOR ADDITIONAL INFORMATION
   b. PARTS MUST BE IN COMPLIANCE TO MOLEX CHEMICAL SUBSTANCES FOR PRODUCTS AND PACKAGING SPECIFICATION: ES-40000-5016
   c. FLAMMABILITY REQUIREMENT: PER ISO3795 OR GM3191
      1. BURN RATE 100mm/MIN MAXIMUM
      2. MATERIAL MUST BE SELF EXTINGUISHING

2. MATERIALS:
   a. MATERIAL: SPS/NYLON GF20, REGRIND 20% MAX BY WEIGHT
   b. STANDARD COLORS FOR POLARIZATION (SEE KEYING OPTIONS TABLE). DEVIATION REQUIRES APPROVAL OF AUTHORIZED PERSON
   c. FOR BLADE BASE MATERIAL, PLATING AND PROCESS LUBRICANT:
      1. TIN: - BASE MATERIAL:COPPER ALLOY, CONDUCTIVITY >=60% IACS AT 20°C;
         TENSILE STRENGTH >= 410 N/mm²P - BARRIER MATERIAL: NICKEL DEPOSIT FROM NICKEL SULFAMATE PLATING SOLUTION W/O ANY ADDITIVES
         THICKNESS: 1.25 - 2.25 MICROMETERS
         - TOP LAYER: 100% ELECTRO-DEPOSITED TIN, MATTE FINISH
         THICKNESS: 2.5 - 4.0 MICROMETERS
      2. SILVER: - BARRIER MATERIAL: ELECTRO-DEPOSITED DUCTILE SULPHAMATE NICKEL
         THICKNESS: 1.25 - 2.25 MICROMETERS
         - TOP LAYER: ELECTRO-DEPOSITED SEMI-BRIGHT PURE SILVER (0.5% MAX IMPURITIES) OVER NICKEL ANTI-TARNISH TREATMENT EVERBRIGHT WS
         THICKNESS: 1.9 - 3.3 MICROMETERS
      3. BLADES MUST CONFORM TO ES-40000-5007, EXCEPT FOR SPECULAR REFLECTIVITY - SECTION 6.0
      4. ANY PROCESS LUBRICANT REMAINING ON THE TERMINAL MUST NOT VARNISH OR DEGRADE IT'S ELECTRICAL PERFORMANCE UP TO A MAXIMUM CLASS AMBIENT TERMPERATURE PER SAE USCAR-2 FOR 1008 HOURS, PROCESS LUBRICANTS SHOULD BE APPROVED BY THE RESPONSIBLE ENGINEER.
      5. INFORMATION FOR BLADE DESIGN WAS DEVELOPED FROM EWCAP DWG: EWCAP-001

3. GEOMETRY:
   a. THIS IS A 100% CAD GENERATED PART. THE CAD MATHEMATICAL DATA IS THE MASTER FOR THIS PART. FOR DIMENSIONAL OR ANY INFORMATION NOT SHOWN ON THIS DRAWING, ANALYZE THE CAD MODEL.
   b. GEOMETRIC DIMENSIONS AND TOLERANCES PER ASME Y14.5M - 1994
   c. GENERAL TOLERANCES: SEE TITLE BLOCK
   d. EDGES AND UNDIMENSIONED DETAILS PER ISO13715

4. MANUFACTURING:
   a. DRAFT TO BE WITHIN TOLERANCE.
      PLUS DRAFT - INDICATES A DIMENSION REPRESENTS THE SMALLEST SIZE OF A FEATURE. DRAFT WILL ADD MATERIAL.
      MINUS DRAFT - INDICATES A DIMENSION REPRESENTS THE LARGEST SIZE OF A FEATURE. DRAFT WILL REMOVE MATERIAL.
   b. ALLOWABLE FLASH MAX 0.20 HIGH BY MAX 0.13 THICK.
   c. ALLOWABLE SPLIT/PARTING LINE MISMATCH 0.2 MAX.
   d. VISUAL DEFECTS SHALL MEET COSMETIC STANDARD PS-45499-002 (Class B)
   e. NO EXTERNAL MOLD RELEASE AGENT ALLOWED DURING MANUFACTURING
   f. NO PARTING LINES, NO DRAFT, MISMATCHES OR EJECTOR MARKS PERMISSIBLE WITHIN SEALING SURFACE. SEALING SURFACE TOOLING TO BE PROCESSED TO A SURFACE FINISH OF NTMA #70 (400 PAPER) MINIMUM

| P/N | OPTION | MATING CONNECTOR COLOR |
|---|---|---|
| 150-S-020-2-D02 | D | STONE GRAY |
| 150-S-020-2-C02 | C | DK GRAY |
| 150-S-020-2-B02 | B | LT GRAY |
| 150-S-020-2-A02 | A | BLACK |

THIS DRAWING CONTAINS INFORMATION THAT IS PROPRIETARY TO MOLEX ELECTRONIC TECHNOLOGIES, LLC AND SHOULD NOT BE USED WITHOUT WRITTEN PERMISSION

FUNCTIONAL SYMBOLS: FA = 0, FC = 0, FP = 0
DIVISIONAL SYMBOLS

| DIMENSION UNITS | SCALE |
|---|---|
| MM | 1:1 |

GENERAL TOLERANCES (UNLESS SPECIFIED)

| | |
|---|---|
| ANGULAR TOL | ± 1° |
| 4 PLACES | ± |
| 3 PLACES | ± |
| 2 PLACES | ± 0.100 |
| 1 PLACE | ± 0.20 |
| 0 PLACES | ± |

DRAFT WHERE APPLICABLE MUST REMAIN WITHIN DIMENSIONS

CURRENT REV DESC: SEE REVISION TABLE

STATUS: Production
DRWN: Yuki Song 2025-07-16
CHK'D: Elvis Song 2025-07-17
APPR: Isong05 2025-07-17

THIRD ANGLE PROJECTION | DRAWING: A1-SIZE | SERIES: 33472

molex

MX150 RCPT
DUAL ROW SEALED ASSEMBLY

PRODUCT CUSTOMER DRAWING

| DOCUMENT NUMBER | DOC TYPE | DOC PART | REVISION |
|---|---|---|---|
| SD-33472-0001 | PSD | 001 | C11 |

MATERIAL NUMBER | CUSTOMER: GENERAL MARKET | SHEET NUMBER: 11 OF 11

FORMAT: TCdesignA1
SIZE: 841x594
DATE: 2020/06/01

| TABLE OF CONTENTS | |
|---|---|
| SHEET NO. | SHEET DESCRIPTION |
| 1 | NOTES AND BOM |
| 2 | CPA DETAIL |

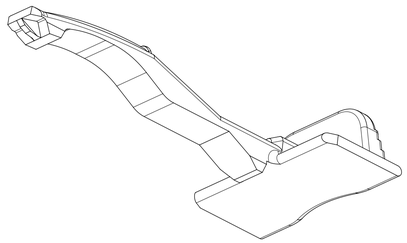

SCALE 5:1

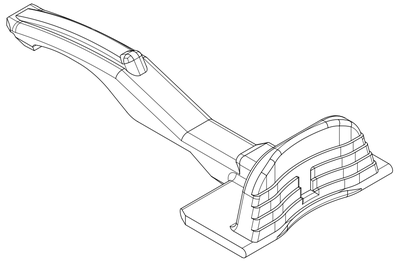

SCALE 5:1

CPA NOTES: VALID UNLESS OTHERWISE SPECIFIED

1. GENERAL:
a. APPLICATION SPECIFICATION SEE: AS-33611-001 AND AS-33472-100
DESIGNED TO MATE WITH RECEPTACLE SEALED ASSEMBLY AS SPECIFIED IN THE BOM
b. PRODUCT SPECIFICATION SEE: PS-33472-000 AND PS-33471-000 AND PS-33476-000.
c. PACKAGING SPECIFICATION SEE: PK-30907-812.
d. PARTS MUST BE IN COMPLIANCE TO MOLEX CHEMICAL SUBSTANCES FOR PRODUCTS AND PACKAGING SPECIFICATION: QEHS-699000-300
e. DATA MUST BE SUBMITTED UNDER THE MOLEX PART NUMBER TO IMDS (COMPANY ID#13255)

2. DESIGN - MATERIALS:
a. PBT GF30
b. RED

3. DESIGN GEOMETRY:
a. THIS IS A 100% CAD GENERATED PART. THE CAD MATHEMATICAL DATA IS THE MASTER FOR THIS PART. FOR DIMENSIONAL OR ANY INFORMATION NOT SHOWN ON THIS DRAWING, ANALYZE THE CAD MODEL.
b. GEOMETRIC DIMENSIONS AND TOLERANCES PER ASME Y14.5M - 1994
c. EDGES AND UNDIMENSIONED DETAILS PER ISO13715
d. CORNERS SHOWN AS SHARP TO BE R 0.2 MAX.
e. VISUAL DEFECTS SHALL MEET COSMETIC STANDARDS PS-45499-002 (CLASS B).

| MOLEX PART NUMBER | STATUS | MATING ASSEMBLY DESCRIPTION | MATING ASSEMBLY DRAWING |
|---|---|---|---|
| 33611-0001 | SALEABLE | MX150 1X2 WAY RECEPTACLE MAT SEAL | SD-33471-021 |
| | | MX150 1X3 WAY RECEPTACLE MAT SEAL | SD-33471-031 |
| | | MX150 1X4 WAY RECEPTACLE MAT SEAL | SD-33471-041 |
| | | MX150 1X5 WAY RECEPTACLE MAT SEAL | SD-33471-051 |
| | | MX150 1X6 WAY RECEPTACLE MAT SEAL | SD-33471-061 |
| | | MX150 2X2 WAY RECEPTACLE MAT SEAL | SD-33472-041 |
| | | MX150 2X3 WAY RECEPTACLE MAT SEAL | SD-33472-061 |
| | | MX150 2X3 WAY RECEPTACLE MAT SEAL W/CLIPSLOT | SD-33472-071 |
| | | MX150 2X4 WAY RECEPTACLE MAT SEAL | SD-33472-081 |
| | | MX150 2X4 WAY RECEPTACLE MAT SEAL W/CLIPSLOT | SD-33472-091 |
| | | MX150 2X6 WAY RECEPTACLE MAT SEAL | SD-33472-121 |
| | | MX150 2X6 WAY RECEPTACLE MAT SEAL W/CLIPSLOT | SD-33472-131 |
| | | MX150 2X8 WAY RECEPTACLE MAT SEAL | SD-33472-161 |
| | | MX150 2X10 WAY RECEPTACLE MAT SEAL | SD-33472-201 |
| | | MX150 HYBRID 16 WAY | SD-33476-161 |
| | | MX150 HYBRID 16 WAY W/CLIP SLOT | SD-33476-181 |

| REV | DESCRIPTION |
|---|---|
| A3 | DOCUMENT TYPE CHANGED FROM SD-33611-001 PDD TO SD-33611-001 PSD |
| A2 | NX RE-MASTERING |
| A | INITIAL RELEASE |

| SYMBOLS | |
|---|---|
| A = 0 | |
| E = 0 | |
| B = 0 | |
| S = 0 | |
| = 0 | |
| C = 0 | |
| = 0 | |
| = 0 | |
| V = 0 | |

THIS DRAWING CONTAINS INFORMATION THAT IS PROPRIETARY TO MOLEX ELECTRONIC TECHNOLOGIES, LLC AND SHOULD NOT BE USED WITHOUT WRITTEN PERMISSION

| DIMENSION UNITS | SCALE |
|---|---|
| mm | 10:1 |

| GENERAL TOLERANCES (UNLESS SPECIFIED) | | |
|---|---|---|
| ANGULAR TOL | ± | 3.0 ° |
| 4 PLACES | ± | |
| 3 PLACES | ± | |
| 2 PLACES | ± | 0.1 |
| 1 PLACE | ± | 0.3 |
| 0 PLACES | ± | |

DRAFT WHERE APPLICABLE MUST REMAIN WITHIN DIMENSIONS

CURRENT REV DESC:

EC NO: 620500
DRWN: MSELANGOVAN 2019/07/02
CHK'D: KBORUSZEWSKI 2019/07/11
APPR: MVANSLAMBROU 2019/07/13

INITIAL REVISION:
DRWN: RELEASE 2019/06/26
APPR: MVANSLAMBROU 2019/07/13

molex

1.5MM STANDARD CONNECTOR
CONNECTOR POS. ASSURANCE

PRODUCT CUSTOMER DRAWING

| THIRD ANGLE PROJECTION | DRAWING | SERIES | MATERIAL NUMBER | CUSTOMER | SHEET NUMBER |
|---|---|---|---|---|---|
| | D-SIZE | 33611 | SEE BOM | GENERAL MARKET | 1 OF 2 |

| DOCUMENT NUMBER | DOC TYPE | DOC PART | REVISION |
|---|---|---|---|
| SD-33611-001 | PSD | 001 | A3 |

| DOCUMENT STATUS | P1 | RELEASE DATE | 2019/07/13 12:33:05 |
|---|---|---|---|

FORMAT: master-tb-prod-D
REVISION: 11
DATE: 2018/01/16

# CPA DETAIL

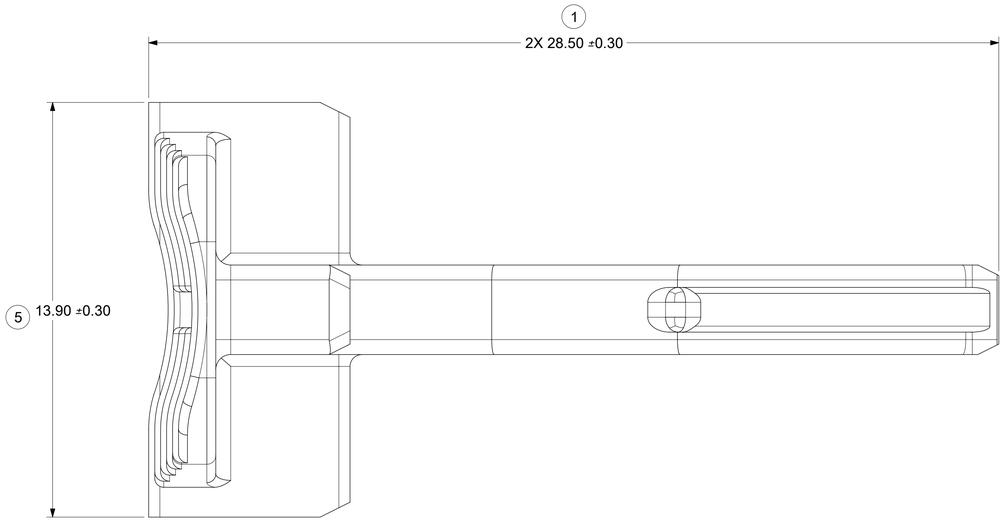


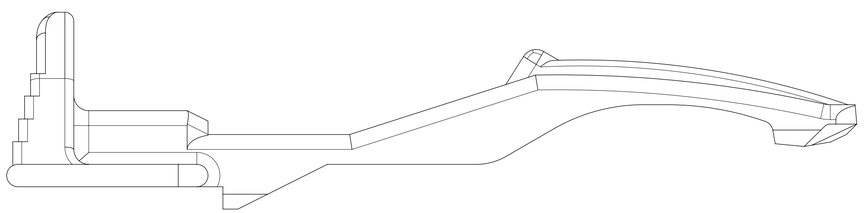

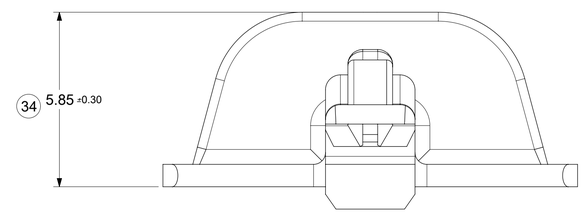


| SYMBOLS | |
|---|---|
| E = | 0 |
| E = | 0 |
| E = | 0 |
| S = | 0 |
| = | 0 |
| C = | 0 |
| = | 0 |
| = | 0 |
| V = | 0 |

THIS DRAWING CONTAINS INFORMATION THAT IS PROPRIETARY TO MOLEX ELECTRONIC TECHNOLOGIES, LLC AND SHOULD NOT BE USED WITHOUT WRITTEN PERMISSION

| DIMENSION UNITS | SCALE |
|---|---|
| mm | 10:1 |

GENERAL TOLERANCES (UNLESS SPECIFIED)

| | | |
|---|---|---|
| ANGULAR TOL | ± | 3.0 ° |
| 4 PLACES | ± | |
| 3 PLACES | ± | |
| 2 PLACES | ± | 0.1 |
| 1 PLACE | ± | 0.3 |
| 0 PLACES | ± | |

DRAFT WHERE APPLICABLE MUST REMAIN WITHIN DIMENSIONS

CURRENT REV DESC:

EC NO: 620500
DRWN: MSELANGOVAN 2019/07/02
CHK'D: KBORUSZEWSKI 2019/07/11
APPR: MVANSLAMBROU 2019/07/13

INITIAL REVISION:
DRWN: RELEASE 2019/06/26
APPR: MVANSLAMBROU 2019/07/13

THIRD ANGLE PROJECTION | DRAWING: D-SIZE | SERIES: 33611

molex

1.5MM STANDARD CONNECTOR
CONNECTOR POS. ASSURANCE

PRODUCT CUSTOMER DRAWING

| DOCUMENT NUMBER | DOC TYPE | DOC PART | REVISION |
|---|---|---|---|
| SD-33611-001 | PSD | 001 | A3 |

| MATERIAL NUMBER | CUSTOMER | SHEET NUMBER |
|---|---|---|
| SEE BOM | GENERAL MARKET | 2 OF 2 |

| DOCUMENT STATUS | P1 | RELEASE DATE | 2019/07/13 12:33:05 |
|---|---|---|---|

TEMPLATE: mpdm-fb-prod-v7
REVISION: R
DATE: 2019-04-18