MICRO SWITCH
FREEPORT ILLINOIS U S A
A DIVISION OF HONEYWELL
FED. MFG. CODE 91929

SWITCH - ENCLOSED

CATALOG LISTING
1EN107 - R

FURNISHED UNDER U.S. GOVERNMENT CONTRACT NO. _____
AND NO PORTION HEREOF SHALL BE RELEASED OUTSIDE THE GOVERNMENT (EXCEPT TO FOREIGN GOVERNMENTS SUBJECT TO THE SAME LIMITATIONS) NOR BE DISCLOSED, USED, OR DUPLICATED FOR PROCUREMENT OR MANUFACTURING PURPOSES EXCEPT AS OTHERWISE AUTHORIZED BY CONTRACT BETWEEN THE GOVERNMENT AND MICRO SWITCH, A DIVISION OF HONEYWELL INC. WITHOUT THE PERMISSION OF THE LATTER. THIS LEGEND SHALL BE MARKED ON ANY REPRODUCTION HEREOF IN WHOLE OR IN PART.

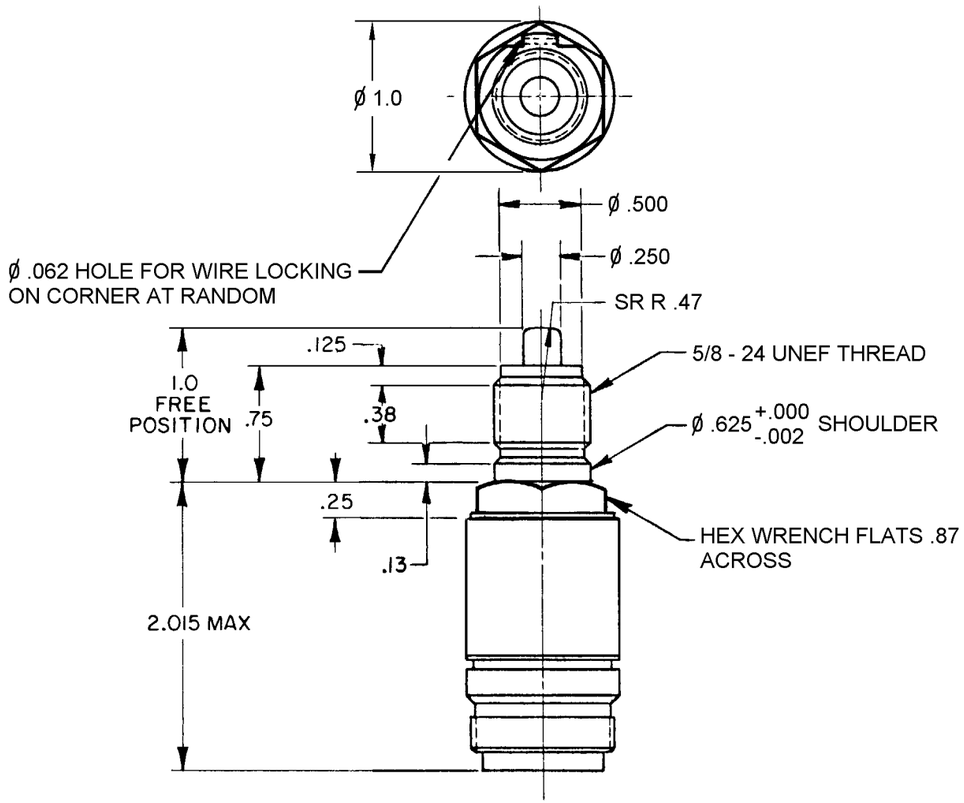

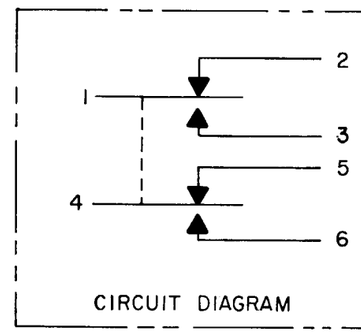

CIRCUIT DIAGRAM

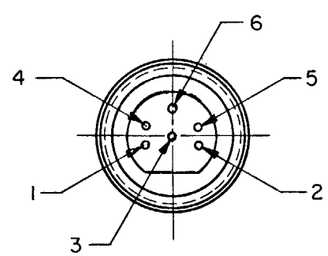

ANSI Y14.5M-1982 APPLIES

THIS DRAWING COVERS A PROPRIETARY ITEM AND IS THE PROPERTY OF MICRO SWITCH, A DIVISION OF HONEYWELL. THIS DRAWING IS NOT TO BE COPIED OR USED WITHOUT THE APPROVAL OF MICRO SWITCH.

THIRD ANGLE PROJECTION

SCALE FULL
DO NOT SCALE PRINT

UNLESS OTHERWISE SPECIFIED TOLERANCES ARE

ONE PLACE	(.0)	± .030
TWO PLACE	(.00)	± .015
THREE PLACE	(.000)	± .005
ANGLES		±

RAW MATERIAL-COMMERCIAL STANDARD
MICRO SWITCH STANDARDS APPLY
DIMENSIONS ARE TO BE MET BEFORE PROTECTIVE COATINGS ARE APPLIED

WEIGHT 5.0 OZ MAX

CHARACTERISTICS

OPERATING FORCE	6-12 LB
FULL OVERTRAVEL FORCE	30 LB MAX
RELEASE FORCE	4 LB MIN
PRETRAVEL	.040 MAX
DIFFERENTIAL TRAVEL	.020 MAX
OVERTRAVEL	.140 MIN

ELECTRICAL DATA

CONTACT ARRANGEMENT
S P D T (2)

LOAD	28 VDC SEA LEVEL	28 VDC 50,000 FT.
RES	4	4
IND	2	2
MOTOR	4	

NOTES
1 - SWITCH SEALED PER MIL-PRF-8805 SYMBOL 4
2 - CIRCUIT DIAGRAM, DATE CODE, FEDERAL MFG. CODE NO. AND CATALOG LISTING 1EN107-R PERMANENTLY MARKED ON SIDE OF HOUSING
3 - COINCIDENCE OF OPERATING AND RELEASING POINTS: .010 OF PLUNGER TRAVEL
4 - ALL EXPOSED PARTS MONEL
5 - CONNECTOR SECTION TO MATE WITH CONNECTOR PER DEPT. OF THE NAVY, BUREAU OF ORDNANCE SCD # 2017223 AND BURTON CONNECTOR 5006-0062

CATALOG LISTING 1EN107-R
PAGE 1 OF 1
RELEASE NO. SR-8445
REPLACES
ISSUE M 33

REVISIONS

A	CO 44351	S L B 12 APR 79	
B	CO 46730	G J W 8 NOV 79	
C	C054075	C E C 14 OCT 83	CMH 04AUG08
D	206642	C S L 24 OCT 02	
E	0042194	MBH 04AUG08	

DRAWN S L B 12 APR 79 CHECK CEB 20 APR 79 CHECK CMH 04AUG08 CHECK

RASTER FO-5285 1-A