**MICRO SWITCH**
a Honeywell Division
FED.MFG.CODE 91929

# SWITCH–BASIC

CATALOG LISTING
**1XE306**

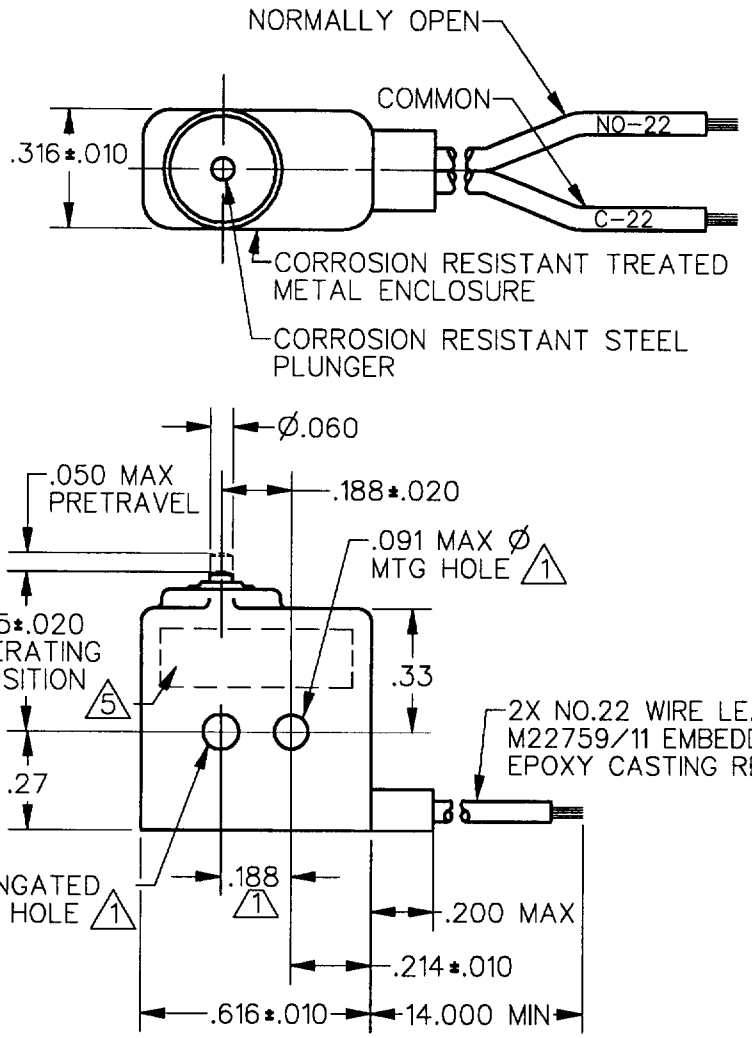


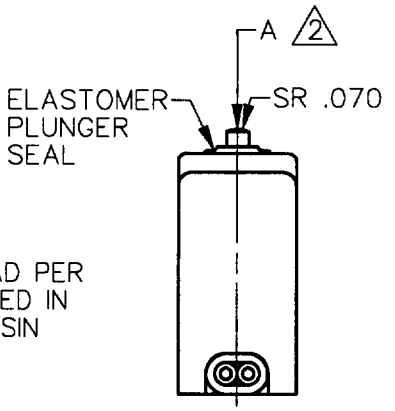


NOTES
1. MOUNTING HOLES WILL ACCEPT .087 MAXØ PINS OR SCREWS ON .188±.002 CENTERS
2. ACTUATION IN LINE WITH ARROW "A" IS RECOMMENDED
3. WEIGHT OF SWITCH ONLY IS .16 OZ MAX. WEIGHT OF SWITCH, WITH WIRE LEADS IS .55 OZ MAX
4 – WIRE LEADS MARKED WITH CIRCUIT IDENTIFICATION AND WIRE GAGE (NO–22, C–22) PER MIL–W–5088
5. YELLOW MARKING IS ON BOTH SIDES OF HOUSING TO IDENTIFY THAT THIS UNIT HAS GOLD CONTACTS
6 – CONTACT MATERIAL: 24K SOLID GOLD

ANSI Y14.5M–1982 APPLIES

THIS DRAWING COVERS A PROPRIETARY ITEM AND IS THE PROPERTY OF MICRO SWITCH, A DIVISION OF HONEYWELL. THIS DRAWING IS NOT TO BE COPIED OR USED WITHOUT THE APPROVAL OF MICRO SWITCH.

THIRD ANGLE PROJECTION

| CHARACTERISTICS | ELECTRICAL DATA | SCALE 2:1 — DO NOT SCALE PRINT |
|---|---|---|
| OPERATING FORCE — — — — 5–17OZ | CONTACT ARRANGEMENT SPNO | UNLESS OTHERWISE SPECIFIED TOLERANCES ARE |
| RELEASE FORCE — — — — 4 OZ MIN | 28 VOLTS DC RATING | ONE PLACE (.0) ±.030 |
| RELEASE TRAVEL — — — — .004 MIN | INDUCTIVE — SEA LEVEL — — — 1/2 AMP | TWO PLACE (.00) ±.015 |
| DIFFERENTIAL TRAVEL — — — .005 MAX | 50,000 FT — — — 1/2 AMP | THREE PLACE (.000) ±.005 |
| OVERTRAVEL — — — — — — .004 MIN | RESISTIVE — SEA LEVEL — — — 1 AMP | ANGLES ± |
| | 50,000 FT — — — 1 AMP | WEIGHT 3 |

1XE306 | M | DRAWING NUMBER | 2 | ISSUE | RELEASE NO. PR–19459 | REPLACES

REVISIONS
A PR19459 TSM 27 AUG 91

CHECK | CHECK | 28 AUG 91 | CHECK | CHECK | 27 AUG 91 | DRAWN | TSM

DDM/CAD