MICRO SWITCH
A DIVISION OF MINNEAPOLIS-HONEYWELL REGULATOR COMPANY
FREEPORT, ILLINOIS
FED. MFR. CODE 91929

SWITCH-ENCLOSED

CATALOG LISTING
51ML9

THIS DRAWING COVERS A PROPRIETARY ITEM AND IS THE PROPERTY OF MICRO SWITCH A DIVISION OF HONEYWELL. THIS DRAWING IS NOT TO BE COPIED OR USED WITHOUT THE APPROVAL OF MICRO SWITCH

M

(M) 51ML9 ISSUE 5 REPLACES
51ML9 RELEASE NO.
M DRAWING NUMBER
ISSUE X 12
K.F.M. 4 APR 58 CHECK
J.W.M. 4 APR 58 CHECK
G.C.H. 4 APR 58 CHECK
O.M.W. 25 MAR 58 DRAWN

REVISIONS

A	C011247	O.M.W. 25 MAR 58
B	C012789	M.B.F. 14 MAY 58
C	C026064	M B S 25 JUNE 69
D	C038085	K P K 23 FEB 77
E	C052194	TSK 13 SEPT 83
F	C055051-B	J A P 17 DEC 84
G	CO 74287	GJW 16 APR 93

FO-50378.003

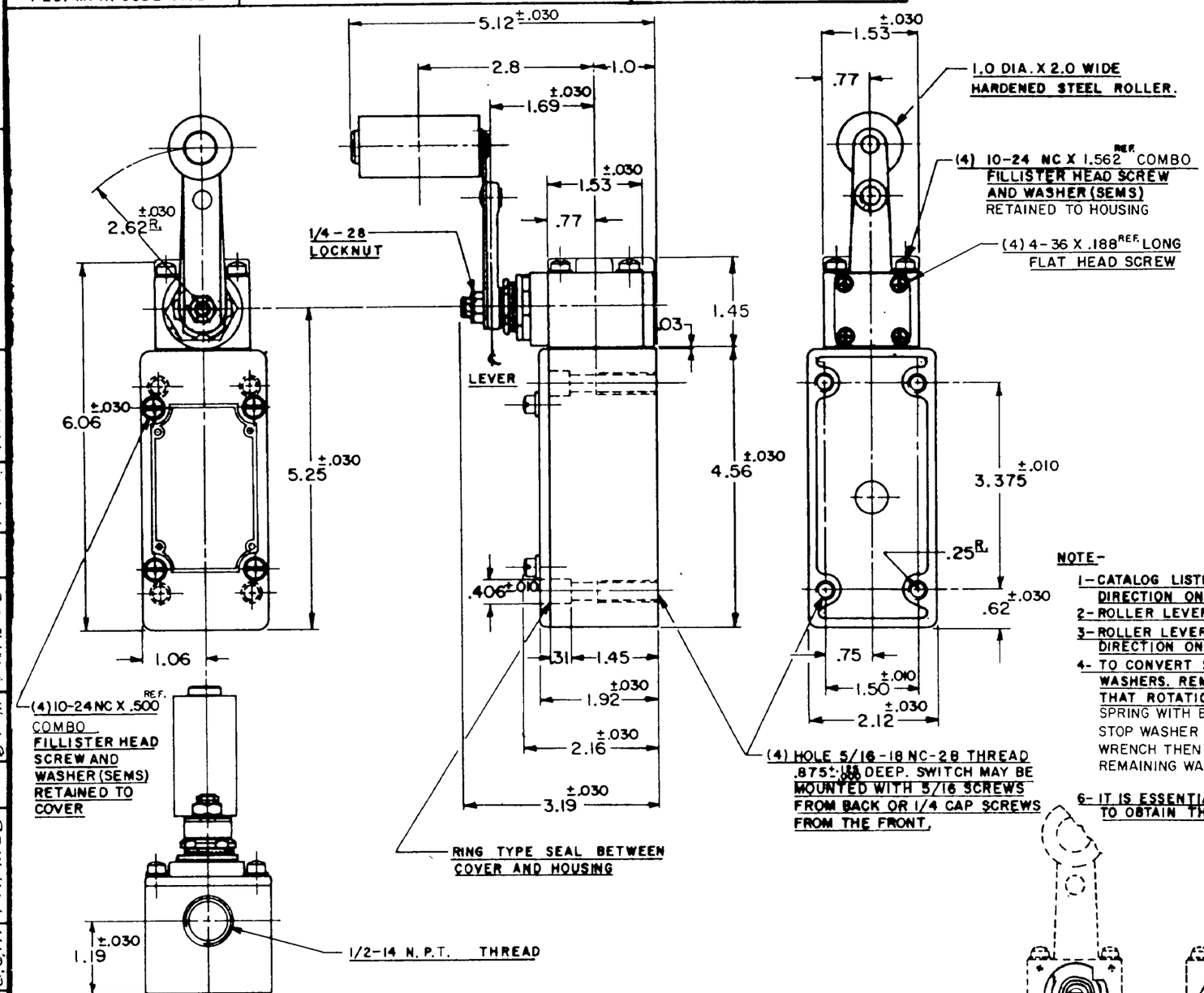

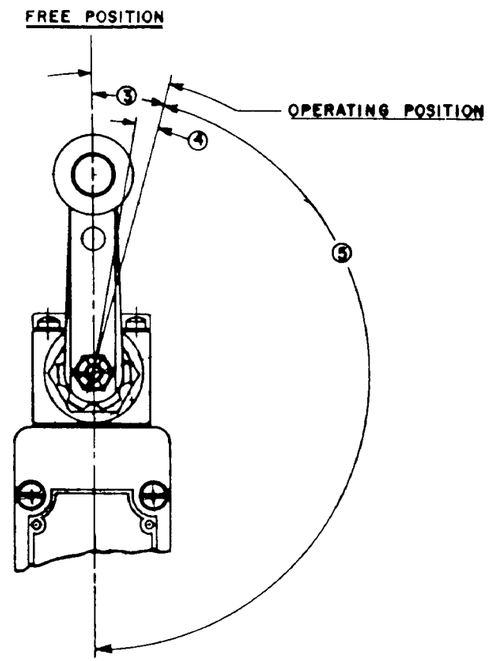

NOTE-

1- CATALOG LISTING 51ML9 SWITCH IS ASSEMBLED FOR ACTUATION IN THE CLOCKWISE DIRECTION ONLY.
2- ROLLER LEVER MAY BE POSITIVELY LOCKED AT INTERVALS OF APPROX. 0.4° (870 POSITIONS).
3- ROLLER LEVER MAY BE ADJUSTED TO ACTUATE THE SWITCH IN THE COUNTER CLOCKWISE DIRECTION ONLY, OR IN THE CLOCKWISE DIRECTION ONLY. (SEE NOTES 1 AND 4)
4- TO CONVERT SWITCH FOR COUNTER CLOCKWISE ACTUATION, REMOVE LOCKNUT, LEVER AND WASHERS. REMOVE COVER PLATE, LOCKRING AND CLOCK SPRING. POSITION SHAFT SUCH THAT ROTATION IN EITHER DIRECTION OPERATES SWITCH, THEN ROTATE 180°, ASSEMBLE SPRING WITH END POSITIONED AGAINST STOP AS IN FIG 2 AND INSTALL LOCKRING. POSITION STOP WASHER PER FIG. 1 PLACE PART WAY ON AND TURN 180° COUNTER CLOCKWISE WITH WRENCH THEN PRESS STOP WASHER ONTO SHAFT TO ENGAGE STOP AND REASSEMBLE REMAINING WASHER, LEVER AND NUT.
6- IT IS ESSENTIAL TO PREVENT ENTRANCE OF HARMFUL AGENTS THRU THE CONDUIT OPENING TO OBTAIN THE FULL BENEFIT OF THE SEALED CONSTRUCTION PROVIDED IN THIS UNIT.

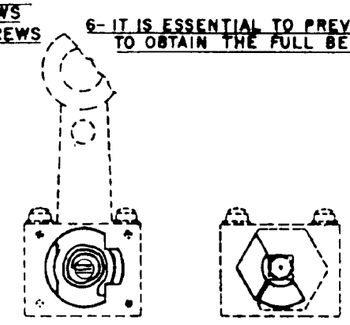

CLOCKWISE

FIG. 1

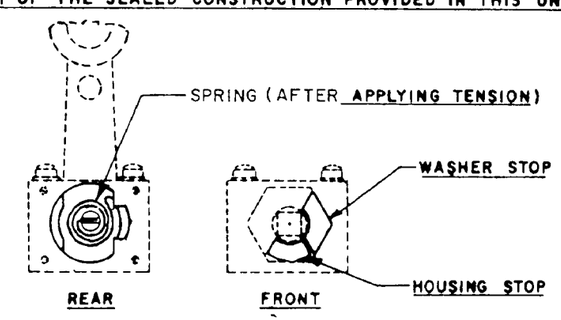

COUNTER CLOCKWISE

FIG. 2

CHARACTERISTICS

OPERATING FORCE	4 LBS. MAX.
FULL OVERTRAVEL FORCE	8 LBS. MAX.
RELEASE FORCE	3/4 LB. MIN.
PRETRAVEL ③	12° MAX.
DIFFERENTIAL TRAVEL ④	4° MAX.
OVERTRAVEL ⑤	168° MIN.
SWITCH-BASIC REPLACEMENT	1MK1

ELECTRICAL DATA

CONTACT ARRANGEMENT	BREAK DISTANCE
S. P. D. T.	

(B) 20 A-120, 240, 480 OR 600 VAC; 3/4 HP-120 VAC, 1 1/2 H.P.-240 VAC; 1/2 A-115 VDC; 1/4 A-230 VDC. PILOT DUTY RATING: 600 VAC MAX.

CSA UL

SCALE 1/2 TO 1

DO NOT SCALE PRINT

UNLESS OTHERWISE SPECIFIED DIMENSIONS ARE IN INCHES

TOLERANCES ARE:

ONE PLACE	(.0)	±.030
TWO PLACE	(.00)	±.015
THREE PLACE	(.000)	±.005
ANGLES		±

WEIGHT