OD1238 Series

DC Fans - 12, 24, 48V
120mm x 38mm (4.7" x 1.5")

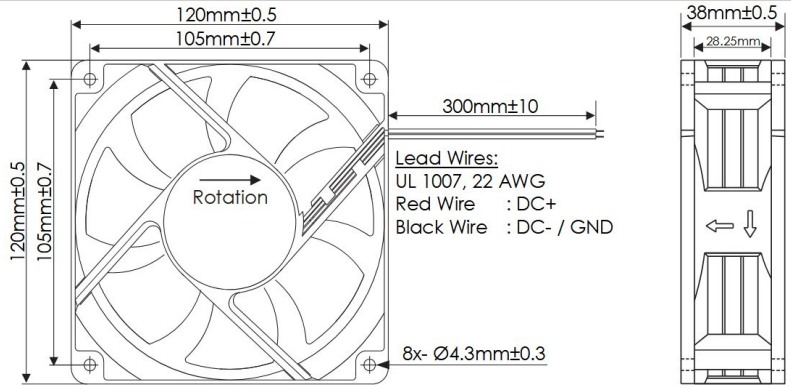

Frame	PBT, UL94 V-0 Plastic
Impeller	PBT, UL94 V-0 Plastic
Connection	2x Lead Wires, 22 AWG
Motor	Brushless DC, Auto Cutoff, Auto Restart, Polarity Protected, Electronically Protected
Bearing System	Dual Ball Bearings, or Sealed Sleeve
Dielectric Strength	500VDC/min, <1mA
Insulation Resistance	≥10MΩ @ 500 VDC

Operating Temperature
-20°C ~ +65°C
Storage Temperature
-25°C ~ +70°C
Life Expectancy
Ball: 70K Hours (L10 at 40°C)
Sleeve: 50K Hours (L10 at 40°C)

Available Options
Tachometer Output
Alarm Output
PWM Speed Control Input
Temperature Speed Control
IP Ratings

Weight: 0.57 lbs.

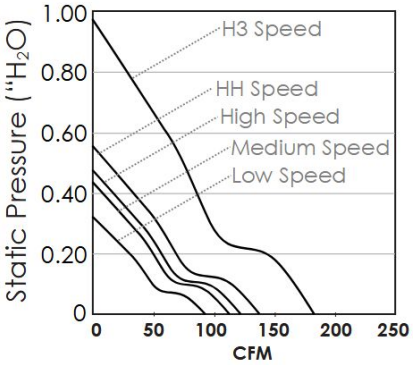

Part Number	Rated Voltage (Volts DC)	Voltage Range (Volts DC)	Input Power (Max Watts)	Rated Current (Max Amps)	Rated Speed (RPM)	Max Airflow (CFM)	Noise Level (dBA)	Max Static Pressure ("H2O)
OD1238-12H3**	12	9 ~ 13.8	17.7	1.43	4190	178.0	54.0	0.977
OD1238-12HH**	12	9 ~ 13.8	10.0	0.90	3195	135.8	48.2	0.558
OD1238-12H**	12	9 ~ 13.8	6.0	0.50	2895	124.1	44.1	0.469
OD1238-12M**	12	9 ~ 13.8	4.8	0.40	2597	114.7	41.3	0.427
OD1238-12L**	12	9 ~ 13.8	2.4	0.20	1975	89.5	35.6	0.316
OD1238-24H3**	24	16 ~ 26	22.1	0.90	4190	178.0	54.0	0.977
OD1238-24HH**	24	16 ~ 26	15.0	0.62	3195	135.8	48.2	0.558
OD1238-24H**	24	16 ~ 26	12.0	0.50	2895	124.1	44.1	0.469
OD1238-24M**	24	16 ~ 26	8.0	0.34	2597	114.7	41.3	0.427
OD1238-24L**	24	16 ~ 26	4.0	0.15	1975	89.5	35.6	0.316
OD1238-48H3**	48	30 ~ 52	20.5	0.41	4190	178.0	54.0	0.977
OD1238-48HH**	48	30 ~ 52	15.0	0.30	3195	135.8	48.2	0.558
OD1238-48H**	48	30 ~ 52	14.0	0.29	2895	124.1	44.1	0.469
OD1238-48M**	48	30 ~ 52	7.0	0.14	2597	114.7	41.3	0.427
OD1238-48L**	48	30 ~ 52	4.0	0.07	1975	89.5	35.6	0.316

** Insert "B" for Ball Bearing type, or "SS" for Sealed Sleeve Bearing type.

Knight Electronics, Inc.
10557 Metric Drive
Dallas, TX 75243
214-340-0265

Revised 1/6/2026
m0

E170149

Orion Fans
Information and data is subject to change without prior notification

OD1238 Series with PWM and Tach

DC Fans - 12, 24, 48V
120mm x 38mm (4.7" x 1.5")

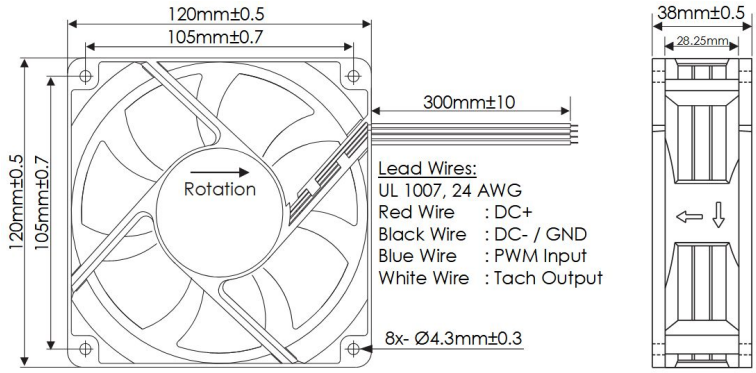

Frame	PBT, UL94 V-0 Plastic
Impeller	PBT, UL94 V-0 Plastic
Connection	4x Lead Wires, 24 AWG
Motor	Brushless DC, Auto Cutoff, Auto Restart, Polarity Protected, Electronically Protected
Bearing System	Dual Ball Bearings
Dielectric Strength	500VDC/min, <1mA
Insulation Resistance	≥10MΩ @ 500 VDC

Operating Temperature
-20°C ~ +65°C
Storage Temperature
-25°C ~ +70°C
Life Expectancy
70,000 Hours (L10 at 40°C)
Installed Options
PWM Speed Control Input
Open Collector Tach Output
Available Options
5V TTL Tach Output

Weight: 0.57 lbs.

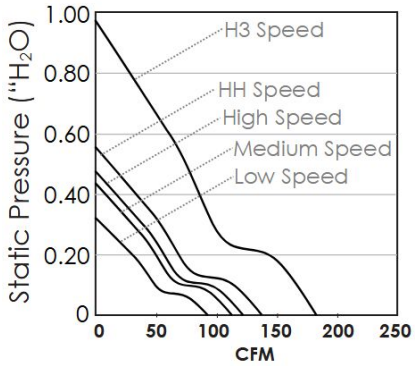

Part Number	Rated Voltage (Volts DC)	Voltage Range (Volts DC)	Input Power (Max Watts)	Rated Current (Max Amps)	Rated Speed (RPM)	Max Airflow (CFM)	Noise Level (dBA)	Max Static Pressure ("H2O)
OD1238-12H3B10A	12	9 ~ 13.8	17.7	1.43	4190	178.0	54.0	0.977
OD1238-12HHB10A	12	9 ~ 13.8	10.0	0.90	3195	135.8	48.2	0.558
OD1238-12HB10A	12	9 ~ 13.8	6.0	0.50	2895	124.1	44.1	0.469
OD1238-12MB10A	12	9 ~ 13.8	4.8	0.40	2597	114.7	41.3	0.427
OD1238-12LB10A	12	9 ~ 13.8	2.4	0.20	1975	89.5	35.6	0.316
OD1238-24H3B10A	24	16 ~ 26	22.1	0.90	4190	178.0	54.0	0.977
OD1238-24HHB10A	24	16 ~ 26	15.0	0.62	3195	135.8	48.2	0.558
OD1238-24HB10A	24	16 ~ 26	12.0	0.50	2895	124.1	44.1	0.469
OD1238-24MB10A	24	16 ~ 26	8.0	0.34	2597	114.7	41.3	0.427
OD1238-24LB10A	24	16 ~ 26	4.0	0.15	1975	89.5	35.6	0.316
OD1238-48H3B10A	48	30 ~ 52	20.5	0.41	4190	178.0	54.0	0.977
OD1238-48HHB10A	48	30 ~ 52	15.0	0.30	3195	135.8	48.2	0.558
OD1238-48HB10A	48	30 ~ 52	14.0	0.29	2895	124.1	44.1	0.469
OD1238-48MB10A	48	30 ~ 52	7.0	0.14	2597	114.7	41.3	0.427
OD1238-48LB10A	48	30 ~ 52	4.0	0.07	1975	89.5	35.6	0.316

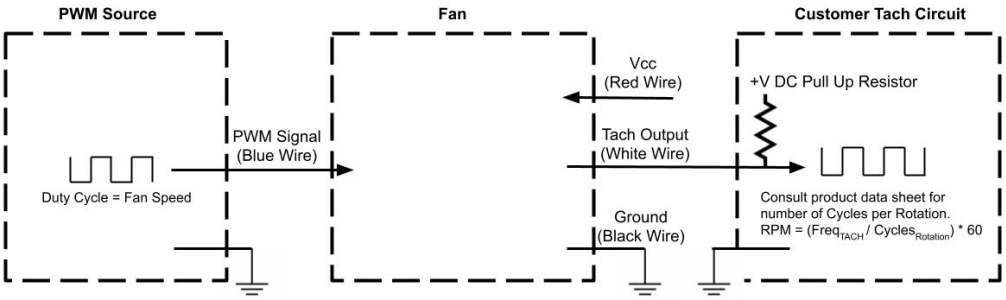

PWM Max High Voltage:	5.5V
PWM Max Sink Current:	5mA
PWM Frequency Range:	1KHz-100KHz
PWM Typical Frequency:	25KHz
RPM at 0% Duty Cycle:	0 RPM

RPM will be full speed if PWM input is disconnected.
RPM will be 0 if PWM input is 0V or grounded.

Tach Max Pullup Voltage:	Fan Vcc
Tach Max Sink Current:	5mA
Tach Cycles per Rotation:	2

Knight Electronics, Inc.
10557 Metric Drive
Dallas, TX 75243
214-340-0265

Revised 1/6/2026
m0

E170149

Orion Fans
Information and data is subject to change without prior notification

OD1238 Series with Open Collector Tach

DC Fans - 12, 24, 48V
120mm x 38mm (4.7" x 1.5")

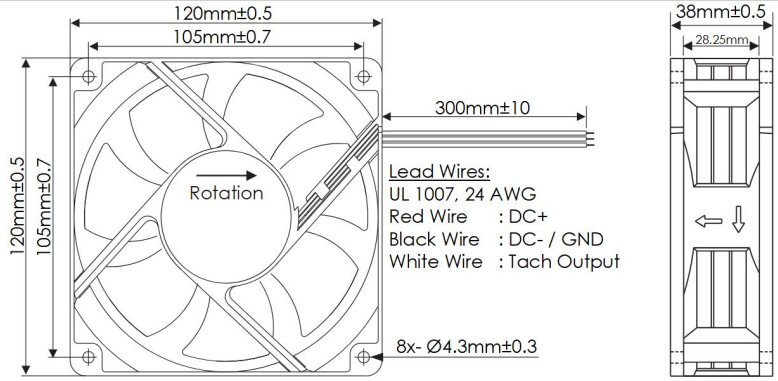

Frame	PBT, UL94 V-0 Plastic
Impeller	PBT, UL94 V-0 Plastic
Connection	3x Lead Wires, 24 AWG
Motor	Brushless DC, Auto Cutoff, Auto Restart, Polarity Protected, Electronically Protected
Bearing System	Dual Ball Bearings
Dielectric Strength	500VDC/min, <1mA
Insulation Resistance	≥10MΩ @ 500 VDC

Operating Temperature
-20°C ~ +65°C
Storage Temperature
-25°C ~ +70°C
Life Expectancy
70,000 Hours (L10 at 40°C)
Installed Options
Open Collector Tach Output
Available Options
5V TTL Tach Output

Weight: 0.57 lbs.

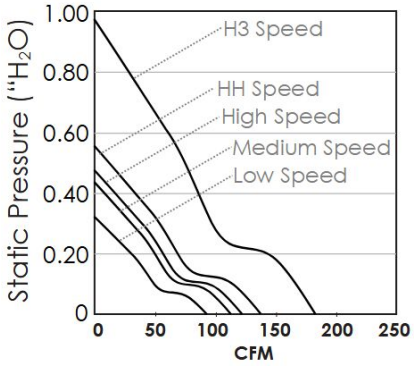

Part Number	Rated Voltage (Volts DC)	Voltage Range (Volts DC)	Input Power (Max Watts)	Rated Current (Max Amps)	Rated Speed (RPM)	Max Airflow (CFM)	Noise Level (dBA)	Max Static Pressure ("H2O)
OD1238-12H3B01A	12	9 ~ 13.8	17.7	1.43	4190	178.0	54.0	0.977
OD1238-12HHB01A	12	9 ~ 13.8	10.0	0.90	3195	135.8	48.2	0.558
OD1238-12HB01A	12	9 ~ 13.8	6.0	0.50	2895	124.1	44.1	0.469
OD1238-12MB01A	12	9 ~ 13.8	4.8	0.40	2597	114.7	41.3	0.427
OD1238-12LB01A	12	9 ~ 13.8	2.4	0.20	1975	89.5	35.6	0.316
OD1238-24H3B01A	24	16 ~ 26	22.1	0.90	4190	178.0	54.0	0.977
OD1238-24HHB01A	24	16 ~ 26	15.0	0.62	3195	135.8	48.2	0.558
OD1238-24HB01A	24	16 ~ 26	12.0	0.50	2895	124.1	44.1	0.469
OD1238-24MB01A	24	16 ~ 26	8.0	0.34	2597	114.7	41.3	0.427
OD1238-24LB01A	24	16 ~ 26	4.0	0.15	1975	89.5	35.6	0.316
OD1238-48H3B01A	48	30 ~ 52	20.5	0.41	4190	178.0	54.0	0.977
OD1238-48HHB01A	48	30 ~ 52	15.0	0.30	3195	135.8	48.2	0.558
OD1238-48HB01A	48	30 ~ 52	14.0	0.29	2895	124.1	44.1	0.469
OD1238-48MB01A	48	30 ~ 52	7.0	0.14	2597	114.7	41.3	0.427
OD1238-48LB01A	48	30 ~ 52	4.0	0.07	1975	89.5	35.6	0.316

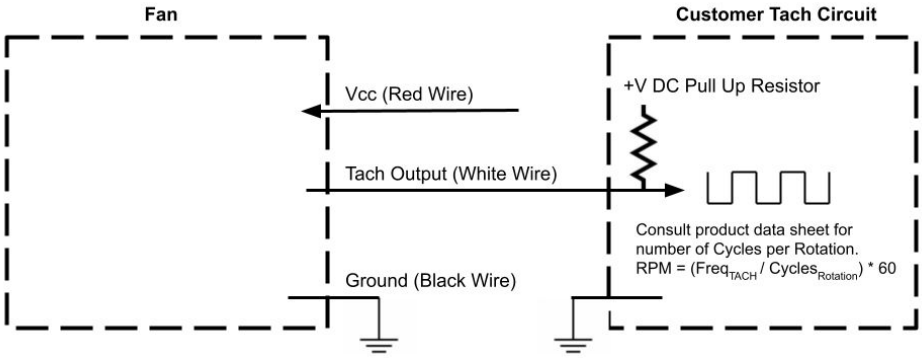

Tach Max Pullup Voltage: Fan Vcc
Tach Max Sink Current: 5mA
Tach Cycles per Rotation: 2

Knight Electronics, Inc.
10557 Metric Drive
Dallas, TX 75243
214-340-0265

Revised 1/6/2026
m0

E170149

Orion Fans
Information and data is subject to change without prior notification

OD1238 Series with 5V TTL Tach

DC Fans - 12, 24, 48V
120mm x 38mm (4.7" x 1.5")

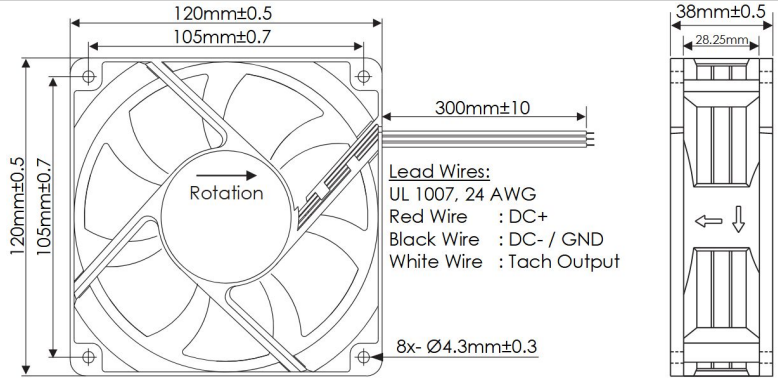

Frame	PBT, UL94 V-0 Plastic
Impeller	PBT, UL94 V-0 Plastic
Connection	3x Lead Wires, 24 AWG
Motor	Brushless DC, Auto Cutoff, Auto Restart, Polarity Protected, Electronically Protected
Bearing System	Dual Ball Bearings
Dielectric Strength	500VDC/min, <1mA
Insulation Resistance	≥10MΩ @ 500 VDC

Operating Temperature
-20°C ~ +65°C
Storage Temperature
-25°C ~ +70°C
Life Expectancy
70,000 Hours (L10 at 40°C)
Installed Options
5V TTL Tach Output
Available Options
Open Collector Tach Output

Weight: 0.57 lbs.

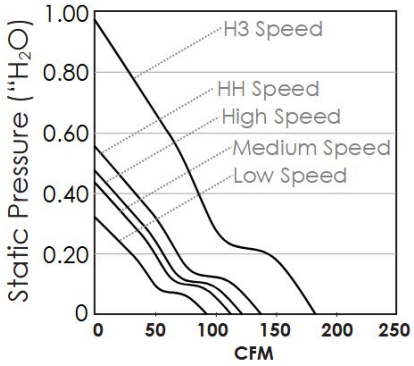

Part Number	Rated Voltage (Volts DC)	Voltage Range (Volts DC)	Input Power (Max Watts)	Rated Current (Max Amps)	Rated Speed (RPM)	Max Airflow (CFM)	Noise Level (dBA)	Max Static Pressure ("H2O)
OD1238-12H3B01	12	9 ~ 13.8	17.7	1.43	4190	178.0	54.0	0.977
OD1238-12HHB01	12	9 ~ 13.8	10.0	0.90	3195	135.8	48.2	0.558
OD1238-12HB01	12	9 ~ 13.8	6.0	0.50	2895	124.1	44.1	0.469
OD1238-12MB01	12	9 ~ 13.8	4.8	0.40	2597	114.7	41.3	0.427
OD1238-12LB01	12	9 ~ 13.8	2.4	0.20	1975	89.5	35.6	0.316
OD1238-24H3B01	24	16 ~ 26	22.1	0.90	4190	178.0	54.0	0.977
OD1238-24HHB01	24	16 ~ 26	15.0	0.62	3195	135.8	48.2	0.558
OD1238-24HB01	24	16 ~ 26	12.0	0.50	2895	124.1	44.1	0.469
OD1238-24MB01	24	16 ~ 26	8.0	0.34	2597	114.7	41.3	0.427
OD1238-24LB01	24	16 ~ 26	4.0	0.15	1975	89.5	35.6	0.316
OD1238-48H3B01	48	30 ~ 52	20.5	0.41	4190	178.0	54.0	0.977
OD1238-48HHB01	48	30 ~ 52	15.0	0.30	3195	135.8	48.2	0.558
OD1238-48HB01	48	30 ~ 52	14.0	0.29	2895	124.1	44.1	0.469
OD1238-48MB01	48	30 ~ 52	7.0	0.14	2597	114.7	41.3	0.427
OD1238-48LB01	48	30 ~ 52	4.0	0.07	1975	89.5	35.6	0.316

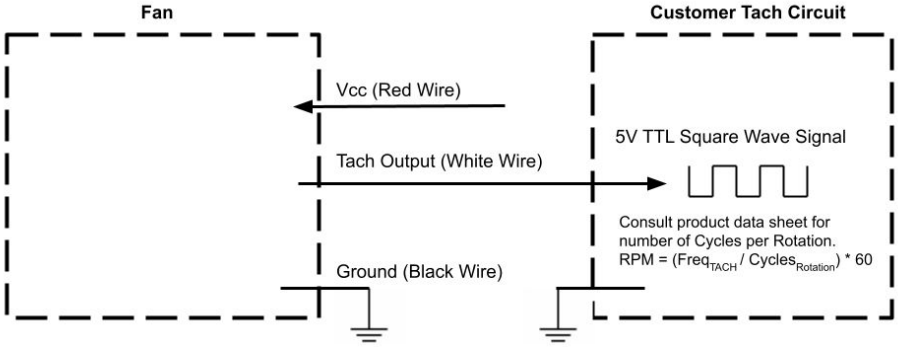

Tach Pulse Output Voltage: 5V
Tach Max Sink Current: 5mA
Tach Cycles per Rotation: 2

Knight Electronics, Inc.
10557 Metric Drive
Dallas, TX 75243
214-340-0265

Revised 1/6/2026
m0

E170149

Orion Fans
Information and data is subject to change without prior notification

OD1238 Series with Open Collector Alarm

DC Fans - 12, 24, 48V
120mm x 38mm (4.7" x 1.5")

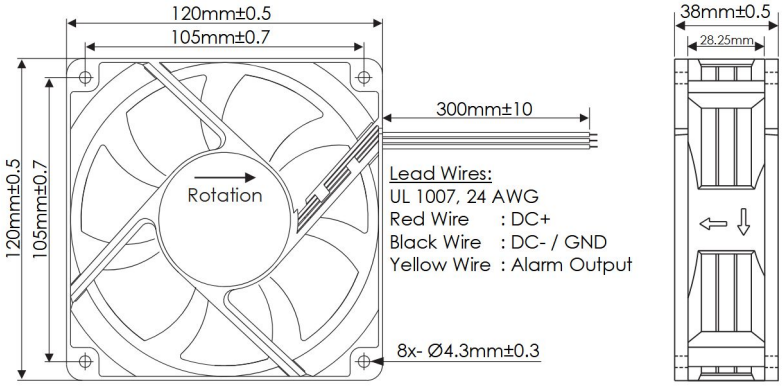

Frame	PBT, UL94 V-0 Plastic
Impeller	PBT, UL94 V-0 Plastic
Connection	3x Lead Wires, 24 AWG
Motor	Brushless DC, Auto Cutoff, Auto Restart, Polarity Protected, Electronically Protected
Bearing System	Dual Ball Bearings
Dielectric Strength	500VDC/min, <1mA
Insulation Resistance	≥10MΩ @ 500 VDC

Operating Temperature
-20°C ~ +65°C
Storage Temperature
-25°C ~ +70°C
Life Expectancy
70,000 Hours (L10 at 40°C)
Installed Options
Open Collector Alarm Output
Available Options
5V TTL Alarm Output
Inverted Alarm States

Weight: 0.57 lbs.

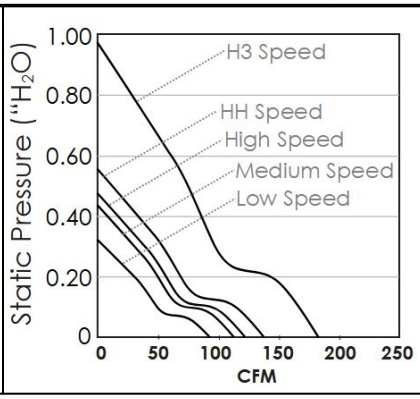

Part Number	Rated Voltage (Volts DC)	Voltage Range (Volts DC)	Input Power (Max Watts)	Rated Current (Max Amps)	Rated Speed (RPM)	Max Airflow (CFM)	Noise Level (dBA)	Max Static Pressure ("H2O)
OD1238-12H3B02A	12	9 ~ 13.8	17.7	1.43	4190	178.0	54.0	0.977
OD1238-12HHB02A	12	9 ~ 13.8	10.0	0.90	3195	135.8	48.2	0.558
OD1238-12HB02A	12	9 ~ 13.8	6.0	0.50	2895	124.1	44.1	0.469
OD1238-12MB02A	12	9 ~ 13.8	4.8	0.40	2597	114.7	41.3	0.427
OD1238-12LB02A	12	9 ~ 13.8	2.4	0.20	1975	89.5	35.6	0.316
OD1238-24H3B02A	24	16 ~ 26	22.1	0.90	4190	178.0	54.0	0.977
OD1238-24HHB02A	24	16 ~ 26	15.0	0.62	3195	135.8	48.2	0.558
OD1238-24HB02A	24	16 ~ 26	12.0	0.50	2895	124.1	44.1	0.469
OD1238-24MB02A	24	16 ~ 26	8.0	0.34	2597	114.7	41.3	0.427
OD1238-24LB02A	24	16 ~ 26	4.0	0.15	1975	89.5	35.6	0.316
OD1238-48H3B02A	48	30 ~ 52	20.5	0.41	4190	178.0	54.0	0.977
OD1238-48HHB02A	48	30 ~ 52	15.0	0.30	3195	135.8	48.2	0.558
OD1238-48HB02A	48	30 ~ 52	14.0	0.29	2895	124.1	44.1	0.469
OD1238-48MB02A	48	30 ~ 52	7.0	0.14	2597	114.7	41.3	0.427
OD1238-48LB02A	48	30 ~ 52	4.0	0.07	1975	89.5	35.6	0.316

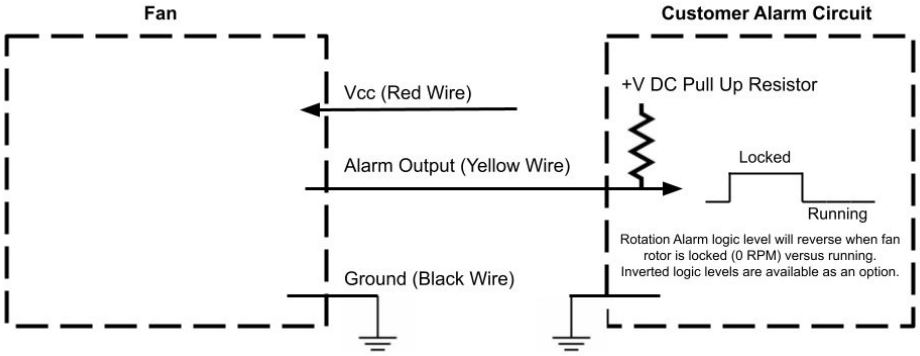

Alarm Max Pullup Voltage: Fan Vcc
Alarm Max Sink Current: 5mA
Alarm Active State: HIGH

Knight Electronics, Inc.
10557 Metric Drive
Dallas, TX 75243
214-340-0265

Revised 1/6/2026
m0

E170149

Orion Fans
Information and data is subject to change without prior notification