Solid-state contactor - ELR 1-230AC/600AC-20 - 2297141

Please be informed that the data shown in this PDF Document is generated from our Online Catalog. Please find the complete data in the user's documentation. Our General Terms of Use for Downloads are valid
(http://phoenixcontact.com/download)

Single-phase solid-state contactor, input voltage: 230 V AC, output current: 20 A, zero voltage switch

Your advantages

- Wear and bounce-free
- High switching frequency
- 24 V DC and 230 V AC input voltage versions

Key Commercial Data

Packing unit	1 pc
GTIN	4 046356 132015
GTIN	4046356132015
Weight per Piece (excluding packing)	259.600 g
Custom tariff number	85362010
Country of origin	Malta

Technical data

Dimensions

Width	22.5 mm
Height	103 mm
Depth	103 mm

Ambient conditions

Ambient temperature (operation)	-30 °C ... 70 °C
Ambient temperature (storage/transport)	-40 °C ... 80 °C

Solid-state contactor - ELR 1-230AC/600AC-20 - 2297141

Technical data

Input data

Input name	Control input
Rated actuating voltage U_C	230 V AC
Triggering voltage range	24 V AC ... 275 V AC
Rated actuating current I_C	approx. 17 mA
Switching threshold	≤ 6 V AC (“0” signal)
	≥ 22 V AC (“1” signal)
Transmission frequency	6 Hz
Operating voltage display	Green LED

Output data load output

Output name	Load output
Operating voltage range	42 V AC ... 660 V AC
Load current range	350 mA ... 20 A (see to derating)
Rated operating current at AC-51	20 A
Rated operating current at AC-53a	5 A
Leakage current	< 3 mA (In off state)
Residual voltage	< 1.6 V
Surge current	250 A (t = 10 ms)
Type of protection	RCV circuit

General

Test voltage input/output	4 kV_{rms}
Mounting position	Vertical (horizontal DIN rail)
Assembly instructions	Can be aligned with ≥ 22.5 mm spacing

Connection data

Connection name	Control circuits
Connection method	Screw connection
Stripping length	8 mm
Screw thread	M4
Conductor cross section solid	0.5 mm² ... 2.5 mm²
Conductor cross section flexible	0.5 mm² ... 2.5 mm²
Conductor cross section AWG	20 ... 14

Connection data 2

Connection name	Load circuit
Connection method	Screw connection
Stripping length	8 mm
Screw thread	M4

Solid-state contactor - ELR 1-230AC/600AC-20 - 2297141

Technical data

Connection data 2

Conductor cross section solid	0.5 mm² ... 4 mm²
Conductor cross section flexible	0.5 mm² ... 4 mm²
Conductor cross section AWG	20 ... 12

Standards and Regulations

Connection in acc. with standard	CUL
Designation	Standards/regulations
Standards/regulations	EN 61000-4-2
	EN 61000-4-3
	EN 61000-4-4
	EN 61000-4-5
	EN 61000-4-6
	EN 55011

Environmental Product Compliance

REACh SVHC	Lead 7439-92-1
China RoHS	Environmentally Friendly Use Period = 50
	For details about hazardous substances go to tab “Downloads”, Category “Manufacturer's declaration”

Drawings

Block diagram

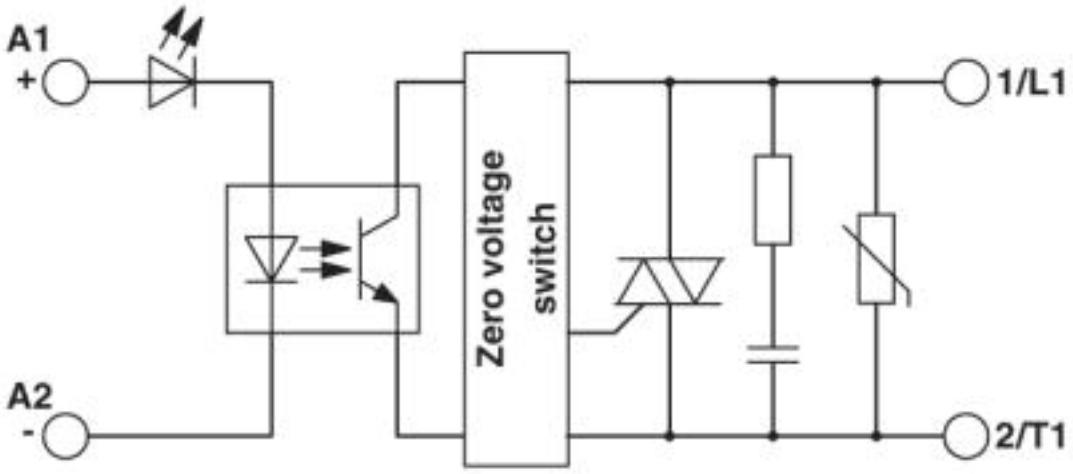

Solid-state contactor - ELR 1-230AC/600AC-20 - 2297141

Diagram

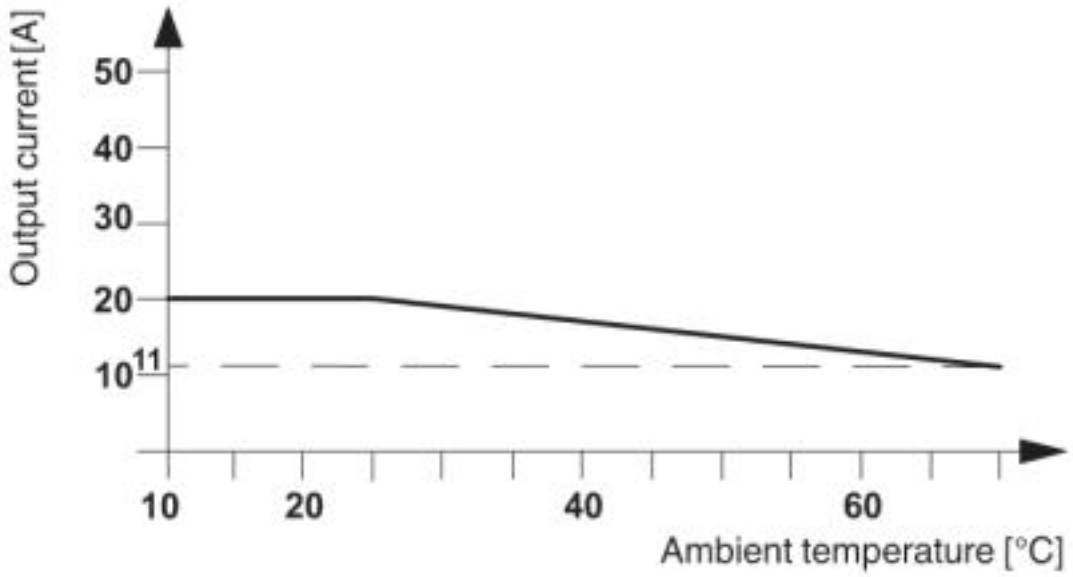

Classifications

eCl@ss

eCl@ss 4.0	27371100
eCl@ss 4.1	27371100
eCl@ss 5.0	27371000
eCl@ss 5.1	27371000
eCl@ss 6.0	27371000
eCl@ss 7.0	27371014
eCl@ss 8.0	27371014
eCl@ss 9.0	27371014

ETIM

ETIM 4.0	EC002055
ETIM 5.0	EC002055
ETIM 6.0	EC002055
ETIM 7.0	EC002055

UNSPSC

UNSPSC 6.01	30211915
UNSPSC 7.0901	39121514
UNSPSC 11	39121514
UNSPSC 12.01	39121514

Solid-state contactor - ELR 1-230AC/600AC-20 - 2297141

Classifications

UNSPSC

UNSPSC 13.2	39121529

Approvals

Approvals

Approvals

UL Recognized / cUL Recognized / EAC / cULus Recognized

Ex Approvals

Approval details

UL Recognized		http://database.ul.com/cgi-bin/XYV/template/LISEXT/1FRAME/index.htm	FILE E 195083
cUL Recognized		http://database.ul.com/cgi-bin/XYV/template/LISEXT/1FRAME/index.htm	FILE E 195083
EAC			RU C-DE.A*30.B.01082
cULus Recognized			

Phoenix Contact 2019 © - all rights reserved
http://www.phoenixcontact.com