onlinecomponents.com
THE ONLINE DISTRIBUTOR OF ELECTRONIC COMPONENTS

PHOENIX CONTACT

Extract from the online catalog

SACC-DSIV-FS-5CON-L90 SH SCO

Order No.: 1438024

http://eshop.phoenixcontact.de/phoenix/treeViewClick.do?UID=1438024

Sensor/actuator flush-type connector, socket, 5-pos., M12 SPEEDCON, A-coded, shielded, rear/screw mounting with M12 thread, with polarity protection, with angled solder connection

Commercial data	
GTIN (EAN)	4046356457521
sales group	D125
Pack	10 pcs.
Customs tariff	85366990
Weight/Piece	0.01392 KG
Catalog page information	Page 30 (PC-2009)

Product notes

WEEE/RoHS-compliant since: 02/12/2009

http://www.download.phoenixcontact.com Please note that the data given here has been taken from the online catalog. For comprehensive information and data, please refer to the user documentation. The General Terms and Conditions of Use apply to Internet downloads.

Technical data

General data

Rated current at 40°C	4 A
Rated voltage	60 V
Number of positions	5
Volume resistance	≤ 3 mΩ

onlinecomponents.com
THE ONLINE DISTRIBUTOR OF ELECTRONIC COMPONENTS

Insulation resistance	≥ 100 MΩ
Ambient temperature (operation)	-25 °C ... 85 °C (plug/socket)

General characteristics

Coding	A - standard
Surge voltage category	II
Pollution degree	3
Degree of protection	IP67
Contact material	CuZn
Contact surface material	Au
Contact carrier material	PA 66
Material, knurls	Zinc die-cast, (nickel-plated)
Sealing material	NBR
Mounting type	Rear mounting M12 x 1 With flat nut
Type of connection	Solder pins
Status display	No

Certificates / Approvals

Certification	UL

UL

Nominal voltage U_N	60 V
Nominal current I_N	4 A
AWG/kcmil	26-20

onlinecomponents.com

Diagrams/Drawings

Drilling plan/solder pad geometry

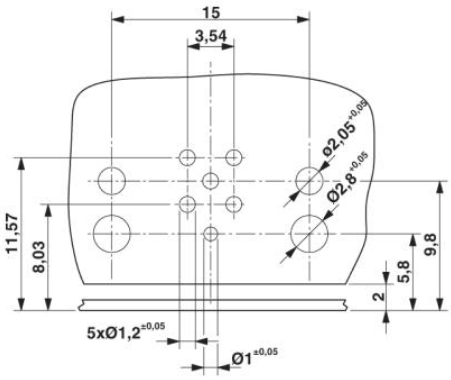

Drilling diagram

Dimensioned drawing

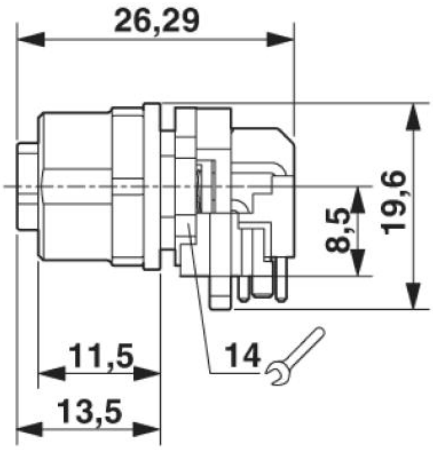

M12 flush-type connector, socket, side view

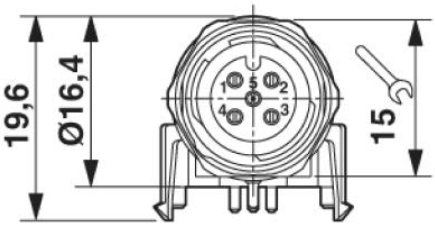

M12 flush-type connector, socket, front view

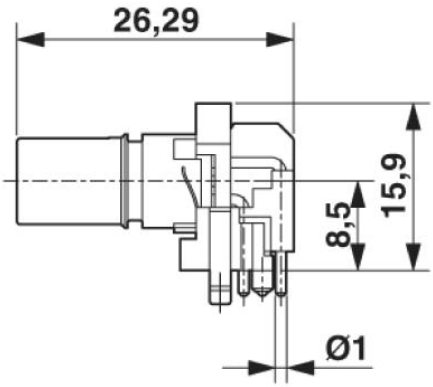

M12 flush-type connector, socket, contact carrier, side view

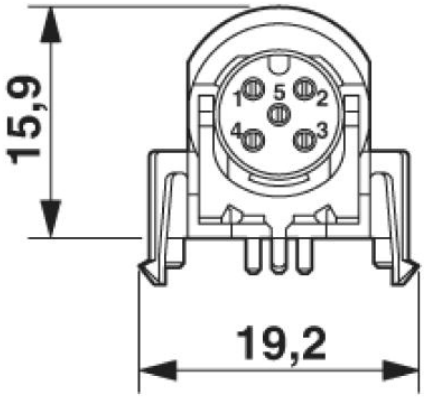

M12 flush-type connector, socket, contact carrier, front view

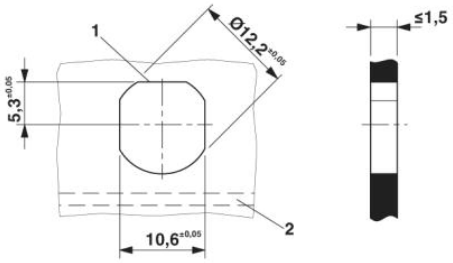

Housing cutout for M12 fastening thread, mounting panel with feed-through hole (alternative with surface as protection against rotation)

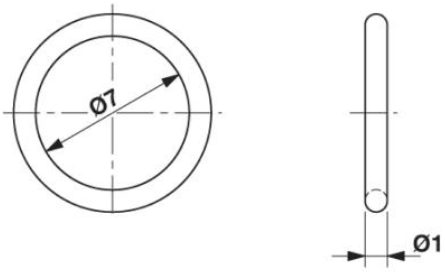

Optionally with O-ring (green) for tight seal when plugged in.
- the axial mating force of 80 N per connector may not be exceeded when using with assembled O-ring!
- Avoid radial forces!

Locked area on the PCB

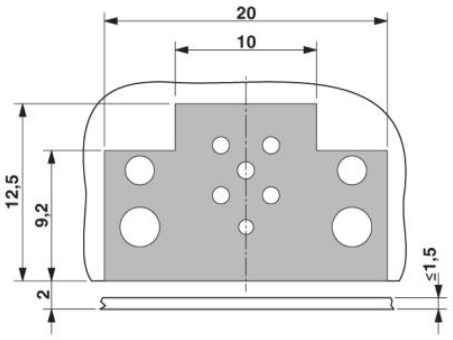

onlinecomponents.com
THE ONLINE DISTRIBUTOR OF ELECTRONIC COMPONENTS

Schematic diagram

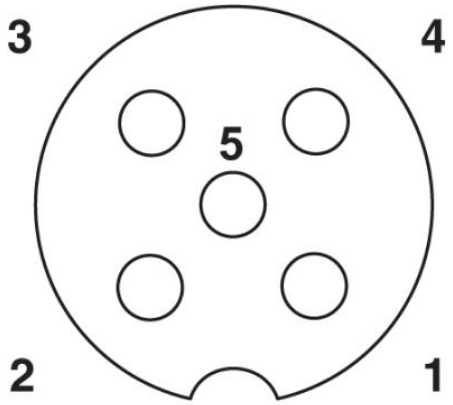

Pin assignment M12 socket, 5-pos., A-coded, socket side view

onlinecomponents.com

onlinecomponents.com
THE ONLINE DISTRIBUTOR OF ELECTRONIC COMPONENTS

Address

PHOENIX CONTACT Deutschland GmbH
Flachsmarktstr. 8
32825 Blomberg,Germany
Phone +49 5235 3 12000
Fax +49 5235 3 41200
http://www.phoenixcontact.de

© 2010 Phoenix Contact
Technical modifications reserved;

onlinecomponents.com