STANCOR® W172DIP Series Reed Relays

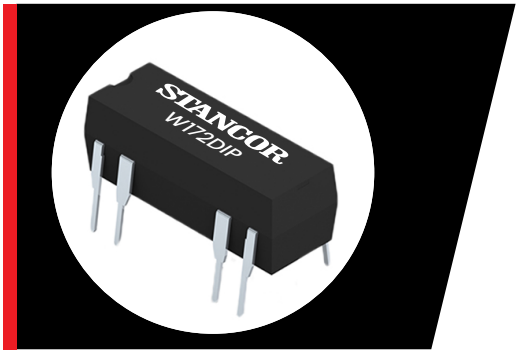

Description

The W172DIP series combines quality and economy in a standard epoxy molded 14-PIN Dual In-line package capable of switching up to 0.2 Amps. This series is ideal for telecom, test and measurement, security, and other general-purpose applications.

Features

- Can be immersed during cleaning
- High Isolation between Input and Output
- High Density Board Mounting
- RoHS Compliant

STANCOR Part Numbers	Nominal Voltage DC ± 10% [V]	Coil Resistance ± 10% [ohm]	Nominal Input Power	Max. Operate Voltage (VDC)	Min. Release Voltage (VDC)	Max Allowable Voltage (VDC)	Contact Configuration	Wiring Diagram
W172DIP-1	5	200	125mW	3.75	0.6	10	SPDT	A
W172DIP-3	12	500	288mW	9.00	1.0	20	SPDT	A
W172DIP-4	24	2000	288mW	18.00	2.0	28	SPDT	A
W172DIP-5	5	200	125mW	3.75	0.6	10	SPDT with Diode	B
W172DIP-7	12	500	288mW	9.00	1.0	20	SPDT with Diode	B
W172DIP-8	24	2000	288mW	18.00	2.0	28	SPDT with Diode	B
W172DIP-31	5	200	125mW	3.75	0.6	10	SPDT	C
W172DIP-33	12	500	288mW	9.00	1.0	20	SPDT	C
W172DIP-34	24	2000	288mW	18.00	2.0	28	SPDT	C
W172DIP-35	5	200	125mW	3.75	0.6	10	SPDT with Diode	D
W172DIP-37	12	500	288mW	9.00	1.0	20	SPDT with Diode	D
W172DIP-38	24	2000	288mW	18.00	2.0	28	SPDT with Diode	D
W172DIP-141	5	200	125mW	3.75	0.6	10	SPDT	E
W172DIP-145	12	500	288mW	9.00	1.0	20	SPDT	E
W172DIP-146	24	2000	288mW	18.00	2.0	28	SPDT	E
W172DIP-147	5	200	125mW	3.75	0.6	10	SPDT with Diode	F
W172DIP-149	12	500	288mW	9.00	1.0	20	SPDT with Diode	F
W172DIP-150	24	2000	288mW	18.00	2.0	28	SPDT with Diode	F

• *Coil measured @ 20°C*

Contact Rating

Contact Form	1 FORM C
Max. Switching Power	3W
Max. Switching Voltage	100VDC or Peak AC
Max. Switching Current	0.2A
Max. Carry Current	0.5A

Dimensions

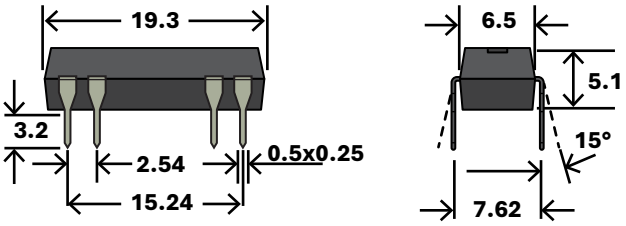

• *All dimensions in mm*

Specification

Contact Resistance	Max.150m Ω
Operate Time (Incl.bounce)	1.5ms
Release Time	2.0ms
Insulation Resistance	10^{9} ohm
Dielectric Strength	Between Open Contacts 200VDC Between Coil to Contacts 1500VDC
Capacitance (between open contacts)	1.0pF
Vibration	10G (10-2KHz)
Shock Resistance	30G (11ms, 1/2sin Wave)
Operating Temperature	-20°C ~+85°C
Life Expectancy of Electrical	1 X 10^{7} ops (5VDC, 1mA)
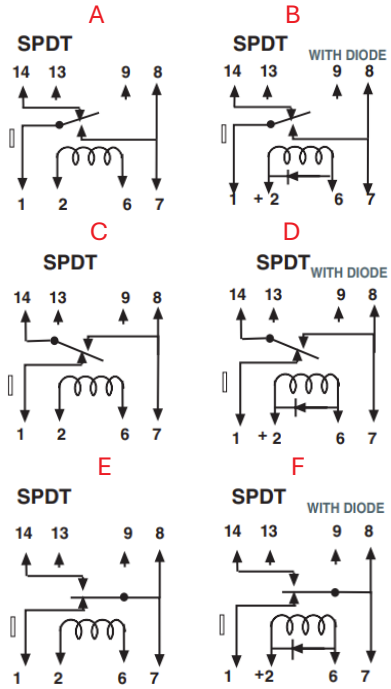
Wiring Diagrams